SAMSUNG

EHS Technical Data Book

EHS Mono for Europe (R32, R290, 50Hz, HP)

Model : Outdoor unit (AE****XYD**/EU)
Indoor unit (AE***DN*MPK/EU)

History

Version	Modification	Date	Remark
Ver.1.0	Released 2024 EHS Mono including New Hydro Unit for Europe TDB	24. 03. 26	
Ver.1.1	Updated some data	24. 08. 22	
Ver.1.2	Updated some data	25. 05. 22	

Nomenclature

Model Name

AE	160	C	X	Y	D	G	K	/	EU
(1)	(2)	(3)	(4)	(5)	(6)	(7)	(8)		Buyer

(1) Classification

AE	EHS

(2) Capacity

X 1/10 kW (3 digits)

(3) Version

R	2019
B	2022
C	2023

(4) Product Type

N	Indoor Unit
X	Outdoor Unit

(5) Feature 1

Y	MONO

(6) Feature 2

D	DELUXE

(7) Rating Voltage

E	220~240V, 50Hz, 1Φ
G	380~415V, 50Hz, 3Φ

(8) Mode

G	Heat Pump (R32)
K	Heat Pump (R290)

Nomenclature

Model Name

AE	200	D	N	W	M	P	K	/	EU
(1)	(2)	(3)	(4)	(5)	(6)	(7)	(8)		Buyer

(1) Classification

AE	EHS

(2) Capacity

x Liter (3 digits)

(3) Version

D	2024

(4) Product Type

N	Indoor Unit
X	Outdoor Unit

(5) Product Notation

W	ClimateHub
X	ClimateHub, 2 zone
Y	Hydro Unit
Z	Hydro Unit, 2 zone

(6) Feature

M	Mono

(7) Rating Voltage

P	220~240V, 50/60Hz, 1Φ 380~415V, 50/60Hz, 3Φ

(8) Mode

K	Heat Pump

Features & Benefits

EHS Mono

R290 Refrigerant

The natural R290 refrigerant has an Ozone Depletion Potential (ODP) of zero and a Global Warming Potential (GWP) of 3, which is lower than conventional R32 or R410A refrigerants*. It also has a reinforced design with 5 layers of safety features to reduce the risks of using the R290 refrigerant.

* GWP by refrigerant: R290 = 3, R32 = 675, R410A = 2088.

Features & Benefits

EHS Mono

35dB(A) quiet operation

Low Sound Level

Works quietly using various advanced technologies for noise reduction. A 4-Step Quiet Mode lets you reduce the sound level in steps or keep it as low as 35dB(A)*. Its Multi-serration Fan is also significantly quieter. And various sound reduction technologies absorb noise and vibration.

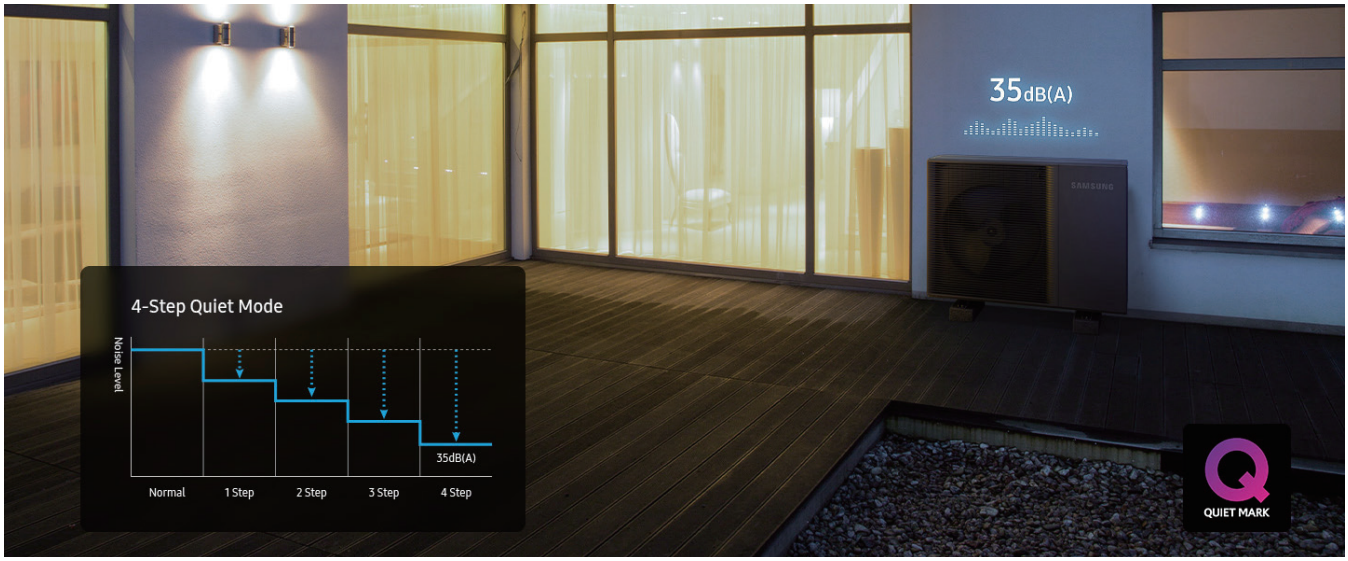

* Based on internal testing of the EHS Mono HT Quiet outdoor units. The noise level is measured 3m away from the front of the outdoor unit, in an anechoic room with an outside temperature of 7°C. Results may vary depending on environmental factors and individual use.

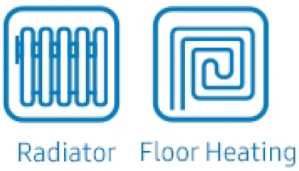

Creates extremely hot water – up to 75°C

Enjoy a supply of extremely hot leaving water of up to 75°C*, which enables effective convection heating and provides sanitary water. It improves energy efficiency**, as it can supply sanitary water of up to 70°C*** using only a Heatpump. And it is hot enough to kill Legionella bacteria****.

* Leaving water temperature from an outdoor unit is 75°C when the outdoor temperature is -10~35°C. Sanitary water leaving a DHW tank is 70°C when the outdoor temperature is -10~43°C. Results may vary depending on the actual usage conditions.
** Based on internal testing compared to a conventional model AE***RXYD*G/EU.
*** Leaving water temperature of sanitary hot water, when the outdoor temperature is between -10~43°C. If the outdoor temperature is lower than -10°C, a Booster Heater is required. Results may vary depending on the actual usage conditions.
**** Sanitary hot water should be stored at 60°C or higher in order to kill Legionella bacteria.

Features & Benefits

EHS Mono

Control anywhere

Smart Connectivity

Control your heating on the go. Smart Connectivity lets you monitor the temperature of indoor rooms and the leaving water, turn it on/off and adjust the settings anytime and anywhere using the SmartThings App*. You can also view your energy usage. Or you can simply tell Bixby what you want**.

* Available on Android and iOS devices. A Wi-Fi connection, Samsung account and an optional Wi-Fi Kit (MIM-H04N) are required.
** Bixby is Samsung's brand of artificial intelligence (AI) / Internet of Things (IoT) voice assistant. A Wi-Fi connection and a Samsung account are required. Bixby only recognizes certain accents and dialects of English (UK), English (US), French (France), German (Germany), Italian (Italy), Korean (South Korea), Mandarin Chinese (China), Spanish (Spain) and Portuguese (Brazil). Other languages to be supported.
⁎ Amazon, Alexa and all related logos are trademarks of Amazon.com, Inc. or its affiliates. Google is a trademark of Google LLC.

Enhanced efficiency
High Efficiency (SCOP A+++)

Enjoy consistently high energy savings. It has an enhanced Seasonal Coefficient of Performance (SCOP) A+++ energy efficiency rating across the whole range of capacities*. It has been increased by up to14%** compared to conventional models and is up to15% more than the A+++ rating criteria***.

* Based on internal testing when generating 35°C water, in accordance with EN14825. Results may vary depending on the system configuration and actual usage conditions.
** Based on internal testing when generating 35°C water using an EHS R290 Mono 5kW model, AE050CXYDEK/EU (SCOP: 5.10), compared to an EHS R32 Mono model of the same capacity, AE050RXYDEG/EU (SCOP: 4.46).
*** Based on internal testing when generating 35°C water using an EHS R290 Mono 5kW model, AE050CXYDEK/EU (SCOP: 5.10), compared to the criteria of A+++, SCOP≧ 4.45.

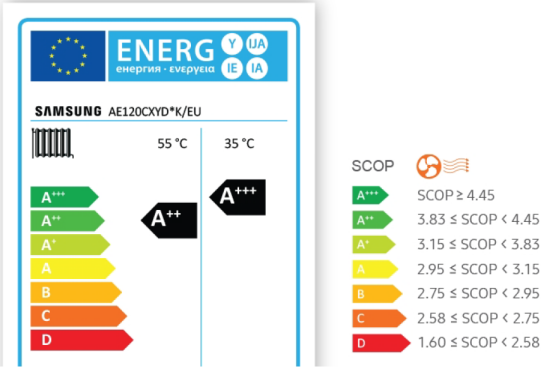

Features & Benefits

Hydro Unit

Slim Fit Design

Give your home a seamless look.

AI Home

Get smart about managing your heating and home.

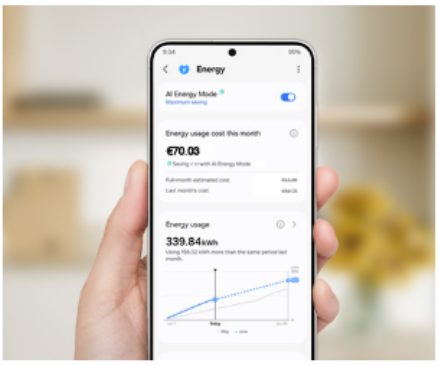

Energy Saving

Save energy without impacting heating.

Contents

1.Line-up

1-1. Outdoor unit

EHS Mono R290

Capacity		5.0 kW	8.0 kW	12.0 kW	16.0 kW
Image					
Model	1 phase	AE050CXYDEK/EU	AE080CXYDEK/EU	AE120CXYDEK/EU	AE160CXYDEK/EU
	3 phase	-	AE080CXYDGK/EU	AE120CXYDGK/EU	AE160CXYDGK/EU

EHS Mono HT Quiet

Capacity		8.0 kW	12.0 kW	14.0 kW
Image				
Model	1 phase	AE080BXYDEG/EU	AE120BXYDEG/EU	AE140BXYDEG/EU
	3 phase	AE080BXYDGG/EU	AE120BXYDGG/EU	AE140BXYDGG/EU

EHS Mono R32

Capacity		5.0 kW	8.0 kW	12.0 / 16.0 kW
Image				
Model	1 phase	AE050RXYDEG/EU	AE080RXYDEG/EU	AE120RXYDEG/EU AE160RXYDEG/EU
	3 phase	-	AE080RXYDGG/EU	AE120RXYDGG/EU AE160RXYDGG/EU

1.Line-up

1-2. Indoor units

Capacity / Type	200 L	200 L
Model	AE200DNXMPK/EU	AE200DNWMPK/EU
ClimateHub	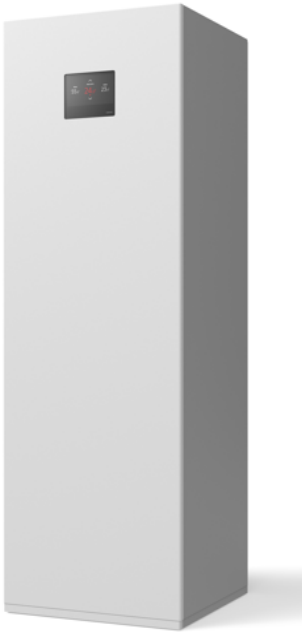	
Capacity / Type	5~16 kW	5~16 kW
Model	AE160DNZMPK/EU	AE160DNYMPK/EU
Hydro Unit		

2. Outdoor Units

2-1. Specifications

Model Name		Indoor Unit				AE200DN*MPK/EU	AE200DN*MPK/EU
		Outdoor Unit				AE050CXYDEK/EU	AE080CXYDEK/EU
Power Supply					Φ, #, V, Hz	1, 2, 220~240, 50	1, 2, 220~240, 50
System	Mode				-	Heat Pump (A2W)	Heat Pump (A2W)
	Performance	Capacity	Heating	A2W Condition #1. (A7/W35) 1)*	W	5,000	8,000
					Btu/h	17,100	27,300
				A2W condition #2	W	5,000	8,000
				A2W condition #3		5,000	8,000
				A2/W35 4)*		5,000	8,000
				A-7/W35 4)*		5,000	8,000
			Cooling	A2W Condition #1. (A35/W18) 1)*	W	5,000	8,000
					Btu/h	17,100	27,300
				A2W condition #2	W	3,900	5,700
	Power	Power Input	Heating	A2W Condition #1. (A7/W35) 1)*	W	980	1,630
				A2W condition #2		1,320	2,160
				A2W condition #3		1,610	2,670
				A2/W35 4)*		1,160	1,900
				A-7/W35 4)*		1,670	2,670
			Cooling	A2W Condition #1. (A35/W18) 1)*	W	1,280	2,050
				A2W condition #2		1,279	1,900
		Current Input	Heating	A2W Condition #1.	A	4.63	7.70
			Cooling			6.05	9.69
			Heating	A2W condition #2	A	6.24	10.21
			Cooling			7.61	12.62
		Current	MCA		A	16.1	26.0
			MFA		A	17.6	28.6
	Efficiency	COP (Nominal Heating) A2W condition #1				5.10	4.91
		EER (Nominal Cooling) A2W condition #1				3.91	3.90
		EER (Nominal Cooling) A2W condition #2				3.05	3.00
		COP		A2W condition #2	W/W	3.80	3.70
				A2W condition #3		3.10	3.00
				A2/W35 4)*		4.30	4.20
				A-7/W35 4)*		3.00	3.00
		PdesignH (LWT 35°C)				5,500	8,000
		PdesignH (LWT 55°C)				5,500	8,000
		SCOP (35°C)				5.10	4.85
		SCOP (55°C)				3.60	3.55
		SCOP Class (35°C)				A+++	A+++
		SCOP Class (55°C)				A++	A++
		SEER				4.20	4.30
	Water Connections	Water Flow Rate (Nominal)		Heating	LPM	14.4	23.1
				Cooling	LPM	14.4	23.1
		Water Flow Rate		Min	LPM	7	7
				Max	LPM	48	48
		Water Pressure (Max)			bar	3	3
		Water Pipe Type	threaded male	Inlet	Φ, mm	28	28
				Outlet	Φ, mm	28	28
		Leaving Water Temperature	Min.	Heating	°C	15	15
			Max.		°C	75	75
			Min.	Cooling	°C	5	5
			Max.		°C	25	25
	Refrigerant	Type			-	R290	R290
		Factory Charging			g	630	870
					tCO_2e	0.00189	0.00261
		Control Method			-	EEV	EEV
Outdoor Unit	Compressor	Type			-	Rotary	Rotary
		Model Name			-	UF8HC5180FEU	UF5HC5260FEX
		Oil		Type	-	Mineral	Mineral
				Initial Charge	cc	590	850
		Quantity			EA	1	1
		Output			W	1,551	2,236
		Starting method			-	Inverter driven	Inverter driven
		Motor	Crankcase heater	Output	W	-	-

2. Outdoor Units

2-1. Specifications

Model Name		Indoor Unit				AE200DN*MPK/EU	AE200DN*MPK/EU
		Outdoor Unit				AE050CXYDEK/EU	AE080CXYDEK/EU
Outdoor Unit	Heat exchanger	Length			mm	986/957	986/957/928
		Rows	Quantity		EA	2	3
		Fin pitch			mm	1.5	1.5
		Passes	Quantity		EA	6-6	9-9
		Face area			m²	0.79	0.79
		Stages	Quantity		EA	38	38
		Empty tubeplate hole	Quantity		EA	-	-
		Tube type			-	Φ7	Φ7
		Fin	Type		-	Corrugate	Corrugate
			Treatment		-	Anti Salt	Anti Salt
	Fan	Type			-	Propeller Fan	Propeller Fan
		Discharge direction				Horizontal	Horizontal
		Air Flow Rate		Heating	m³/min	52	65
				Cooling	m³/min	55	69
		Quantity			EA	1	1
	Fan motor	Quantity			EA	1	1
		Model			-	FMDC531SSJ	FMDC531SSJ
		Output			W	125	125
		Drive			-	Direct drive	Direct drive
		Speed	Steps		-	-	-
			Heating		rpm	550	720
			Cooling		rpm	580	760
	Sound Level	Sound Pressure Level		Heating	dB(A)	41	45
				Cooling	dB(A)	41	45
				Night Mode(3m)	dB(A)	35	35
		Sound Power Level		Heating	dB(A)	55	59
				Cooling	dB(A)	55	59
	Connections	Water pipe		Inlet	-	BSPP male 1"	BSPP male 1"
				Outlet	-	BSPP male 1"	BSPP male 1"
	Casing	Color			-	Shadow Gray	Shadow Gray
		Material			-	GI-SGCC	GI-SGCC
	Packing	Material			-	EPS/BOX	EPS/BOX
		Weight			kg	13	13
	External Dimension	Net Weight			kg	86	98
		Shipping Weight			kg	96	108
		Net Dimensions (WxHxD)			mm	998x850x500	998x850x500
		Shipping Dimensions (WxHxD)			mm	1,070x1,018x630	1,070x1,018x630
	Operating Temp. Range	Heating		Min.	°C	-25	-25
				Max.	°C	35	35
		Cooling		Min.	°C	10	10
				Max.	°C	46	46
		D.Hot Water		Min.	°C	-25	-25
				Max.	°C	43	43

NOTE

- Specifications may be subject to change without prior notice.
  1) A2W Condition #1 : (Heating) Water In/Out 30°C/35°C, Outdoor Air 7°C[DB]/6°C[WB];
     (Cooling) Water In/Out 23°C/18°C, Outdoor Air 35°C[DB].
  2) A2W Condition #2 : (Heating) Water In/Out 40°C/45°C, Outdoor Air 7°C[DB]/6°C[WB];
     (Cooling) Water In/Out 12°C/7°C, Outdoor Air 35°C[DB].
  3) A2W Condition #3 : (Heating) Water In/Out 47°C/55°C, Outdoor Air 7°C[DB]/6°C[WB].
  4) A2W Condition : (A2W35) Water In/Out -/35°C, Outdoor Air 2°C[DB]/1°C[WB];
     (A-7/W35) Water In/Out -/35°C, Outdoor Air -7°C[DB]/-(※ Peak Capacity)
- Select wire size based on the value of MCA
- Sound pressure level is obtained in an anechoic room.
  - Sound pressure level is a relative value, depending on the distance and acoustic environment.
  - Sound pressure level may differ depending on operation condition.
  - dBA = A-weighted sound pressure level
  - Reference acoustic pressure 0 dB = 20uPa
- Sound power level is an absolute value that a sound source generates.
  - dBA = A-weighted Sound power level
  - Reference power : 1pW
  - Measured according to ISO 3741
- These products contain R290 (GWP=3) which is fluorinated greenhouse gas.
- The system is operated in (-25°C ≤ Outdoor temp. < -20°C) condition, but no guarantee of capacity.

2. Outdoor Units

2-1. Specifications

Model Name		Indoor Unit				AE200DN*MPK/EU	AE200DN*MPK/EU
		Outdoor Unit				AE120CXYDEK/EU	AE160CXYDEK/EU
Power Supply					Φ, #, V, Hz	1, 2, 220~240, 50	1, 2, 220~240, 50
System	Mode				-	Heat Pump (A2W)	Heat Pump (A2W)
	Performance	Capacity	Heating	A2W Condition #1. (A7/W35) 1)*	W	12,000	16,000
					Btu/h	40,900	54,600
				A2W condition #2	W	12,000	16,000
				A2W condition #3		12,000	16,000
				A2/W35 4)*		12,000	16,000
				A-7/W35 4)*		12,000	16,000
			Cooling	A2W Condition #1. (A35/W18) 1)*	W	12,000	14,000
					Btu/h	40,900	47,800
				A2W condition #2	W	9,000	10,400
	Power	Power Input	Heating	A2W Condition #1. (A7/W35) 1)*	W	2,500	3,550
				A2W condition #2		3,240	4,570
				A2W condition #3		4,000	5,520
				A2/W35 4)*		2,790	4,100
				A-7/W35 4)*		4,000	5,710
			Cooling	A2W Condition #1. (A35/W18) 1)*	W	3,000	3,680
				A2W condition #2		3,103	3,586
		Current Input	Heating	A2W Condition #1.	A	11.81	16.78
			Cooling			14.18	17.39
			Heating	A2W condition #2	A	15.31	21.60
			Cooling			18.90	26.09
		Current	MCA		A	32.0	32.0
			MFA		A	35.2	35.2
	Efficiency	COP (Nominal Heating) A2W condition #1				4.80	4.51
		EER (Nominal Cooling) A2W condition #1				4.00	3.80
		EER (Nominal Cooling) A2W condition #2				2.90	2.90
		COP		A2W condition #2	W/W	3.70	3.50
				A2W condition #3		3.00	2.90
				A2/W35 4)*		4.30	3.90
				A-7/W35 4)*		3.00	2.80
		PdesignH (LWT 35°C)				12,000	15,500
		PdesignH (LWT 55°C)				12,000	14,500
		SCOP (35°C)				4.90	4.70
		SCOP (55°C)				3.65	3.55
		SCOP Class (35°C)				A+++	A+++
		SCOP Class (55°C)				A++	A++
		SEER				4.80	5.00
	Water Connections	Water Flow Rate (Nominal)		Heating	LPM	34.6	46.2
				Cooling	LPM	34.6	40.4
		Water Flow Rate		Min	LPM	7	7
				Max	LPM	58	58
		Water Pressure (Max)			bar	3	3
		Water Pipe Type	threaded male	Inlet	Φ, mm	28	28
				Outlet	Φ, mm	28	28
		Leaving Water Temperature	Min.	Heating	°C	15	15
			Max.		°C	75	75
			Min.	Cooling	°C	5	5
			Max.		°C	25	25
	Refrigerant	Type			-	R290	R290
		Factory Charging			g	1,250	1,250
					tCO_2e	0.00375	0.00375
		Control Method			-	EEV	EEV
Outdoor Unit	Compressor	Type			-	Scroll	Scroll
		Model Name			-	DS4HC5066FNA	DS4HC5066FNA
		Oil		Type	-	Kixx RF P85	Kixx RF P85
				Initial Charge	cc	1,100	1,100
		Quantity			EA	1	1
		Output			W	3,803	3,803
		Starting method			-	Inverter driven	Inverter driven
		Motor	Crankcase heater	Output	W	-	-

2. Outdoor Units

2-1. Specifications

Model Name		Indoor Unit				AE200DN*MPK/EU	AE200DN*MPK/EU
		Outdoor Unit				AE120CXYDEK/EU	AE160CXYDEK/EU
Outdoor Unit	Heat exchanger	Length			mm	1,239/1,210/1,182	1,239/1,210/1,182
		Rows	Quantity		EA	3	3
		Fin pitch			mm	1.5	1.5
		Passes	Quantity		EA	22-12	22-12
		Face area			m²	1.17	1.17
		Stages	Quantity		EA	46	46
		Empty tubeplate hole	Quantity		EA	-	-
		Tube type			-	Φ7	Φ7
		Fin	Type		-	Corrugate	Corrugate
			Treatment		-	Anti Salt	Anti Salt
	Fan	Type			-	Propeller Fan	Propeller Fan
		Discharge direction				Horizontal	Horizontal
		Air Flow Rate		Heating	m³/min	95	95
				Cooling	m³/min	90	90
		Quantity			EA	1	1
	Fan motor	Quantity			EA	1	1
		Model			-	SIC-88FWJ-F1122-1	SIC-88FWJ-F1122-1
		Output			W	122	122
		Drive			-	Direct drive	Direct drive
		Speed	Steps		-	-	-
			Heating		rpm	590	590
			Cooling		rpm	560	580
	Sound	Sound Pressure		Heating	dB(A)	47	51
				Cooling	dB(A)	47	51
				Night Mode(3m)	dB(A)	35	35
		Sound Power		Heating	dB(A)	60	65
				Cooling	dB(A)	60	65
	Connections	Water pipe		inlet	-	BSPP male 1"	BSPP male 1"
				outlet	-	BSPP male 1"	BSPP male 1"
	Casing	Color			-	Shadow Gray	Shadow Gray
		Material			-	GI-SGCC	GI-SGCC
	Packing	Material			-	EPS/BOX	EPS/BOX
		Weight			kg	20	20
	External Dimension	Net Weight			kg	140	140
		Shipping Weight			kg	154	154
		Net Dimensions (WxHxD)			mm	1,270x1,018x530	1,270x1,018x530
		Shipping Dimensions (WxHxD)			mm	1,330x1,226x630	1,330x1,226x630
	Operating Temp. Range	Heating		Min.	℃	-25	-25
				Max.	℃	35	35
		Cooling		Min.	℃	10	10
				Max.	℃	46	46
		D.Hot Water		Min.	℃	-25	-25
				Max.	℃	43	43

NOTE

- Specifications may be subject to change without prior notice.
  1) A2W Condition #1 : (Heating) Water In/Out 30℃/35℃, Outdoor Air 7℃[DB]/6℃[WB];
     (Cooling) Water In/Out 23℃/18℃, Outdoor Air 35℃[DB].
  2) A2W Condition #2 : (Heating) Water In/Out 40℃/45℃, Outdoor Air 7℃[DB]/6℃[WB];
     (Cooling) Water In/Out 12℃/7℃, Outdoor Air 35℃[DB].
  3) A2W Condition #3 : (Heating) Water In/Out 47℃/55℃, Outdoor Air 7℃[DB]/6℃[WB].
  4) A2W Condition : (A2W35) Water In/Out -/35℃, Outdoor Air 2℃[DB]/1℃[WB];
     (A-7/W35) Water In/Out -/35℃, Outdoor Air -7℃[DB]/-(※ Peak Capacity)
- Select wire size based on the value of MCA
- Sound pressure level is obtained in an anechoic room.
  - Sound pressure level is a relative value, depending on the distance and acoustic environment.
  - Sound pressure level may differ depending on operation condition.
  - dBA = A-weighted sound pressure level
  - Reference acoustic pressure 0 dB = 20uPa
- Sound power level is an absolute value that a sound source generates.
  - dBA = A-weighted Sound power level
  - Reference power : 1pW
  - Measured according to ISO 3741
- These products contain R290 (GWP=3) which is fluorinated greenhouse gas.
- The system is operated in (-25℃ ≤ Outdoor temp. < -20℃) condition, but no guarantee of capacity.

2. Outdoor Units

2-1. Specifications

Model Name		Indoor Unit				AE200DN*MPK/EU	AE200DN*MPK/EU	AE200DN*MPK/EU
		Outdoor Unit				AE080CXYDGK/EU	AE120CXYDGK/EU	AE160CXYDGK/EU
Power Supply					Φ, #, V, Hz	3, 4, 380~415, 50	3, 4, 380~415, 50	3, 4, 380~415, 50
System	Mode				-	Heat Pump (A2W)	Heat Pump (A2W)	Heat Pump (A2W)
	Performance	Capacity	Heating	A2W Condition #1. (A7/W35) 1)*	W	8,000	12,000	16,000
					Btu/h	27,300	40,900	54,600
				A2W condition #2	W	8,000	12,000	16,000
				A2W condition #3		8,000	12,000	16,000
				A2/W35 4)*		8,000	12,000	16,000
				A-7/W35 4)*		8,000	12,000	16,000
			Cooling	A2W Condition #1. (A35/W18) 1)*	W	8,000	12,000	14,000
					Btu/h	27,300	40,900	47,800
				A2W condition #2	W	5,700	9,000	10,400
	Power	Power Input	Heating	A2W Condition #1. (A7/W35) 1)*	W	1,630	2,500	3,550
				A2W condition #2		2,160	3,240	4,570
				A2W condition #3		2,670	4,000	5,520
				A2/W35 4)*		1,900	2,790	4,100
				A-7/W35 4)*		2,670	4,000	5,710
			Cooling	A2W Condition #1. (A35/W18) 1)*	W	2,050	3,000	3,680
				A2W condition #2		1,900	3,103	3,714
		Current Input	Heating	A2W Condition #1.	A	2.56	3.92	5.57
			Cooling			3.22	4.71	5.77
			Heating	A2W condition #2	A	3.39	5.08	7.17
			Cooling			4.19	6.28	8.66
		Current	MCA		A	16.1	16.1	16.1
			MFA		A	17.7	17.7	17.7
	Efficiency	COP (Nominal Heating) A2W condition #1				4.91	4.80	4.51
		EER (Nominal Cooling) A2W condition #1				3.90	4.00	3.80
		EER (Nominal Cooling) A2W condition #2				3.00	2.90	2.90
		COP		A2W condition #2	W/W	3.70	3.70	3.50
				A2W condition #3		3.00	3.00	2.90
				A2/W35 4)*		4.20	4.30	3.90
				A-7/W35 4)*		3.00	3.00	2.80
		PdesignH (LWT 35°C)				8,000	12,000	15,500
		PdesignH (LWT 55°C)				8,000	12,000	15,500
		SCOP (35°C)				4.85	4.90	4.70
		SCOP (55°C)				3.55	3.65	3.55
		SCOP Class (35°C)				A+++	A+++	A+++
		SCOP Class (55°C)				A++	A++	A++
		SEER				4.30	4.80	5.00
	Water Connections	Water Flow Rate (Nominal)		Heating	LPM	23.1	34.6	46.2
				Cooling	LPM	23.1	34.6	40.4
		Water Flow Rate		Min	LPM	7	7	7
				Max	LPM	48	58	58
		Water Pressure (Max)			bar	3	3	3
		Water Pipe Type	threaded male	Inlet	Φ, mm	28	28	28
				Outlet	Φ, mm	28	28	28
		Leaving Water Temperature	Min.	Heating	°C	15	15	15
			Max.		°C	75	75	75
			Min.	Cooling	°C	5	5	5
			Max.		°C	25	25	25
	Refrigerant	Type			-	R290	R290	R290
		Factory Charging			g	870	1,250	1,250
					tCO_2e	0.00261	0.00375	0.00375
		Control Method			-	EEV	EEV	EEV
Outdoor Unit	Compressor	Type			-	Rotary	Scroll	Scroll
		Model Name			-	UF5HC5260FEX	DS4HC5066FNA	DS4HC5066FNA
		Oil		Type	-	Mineral	Kixx RF P85	Kixx RF P85
				Initial Charge	cc	850	1,100	1,100
		Quantity			EA	1	1	1
		Output			W	2,236	3,803	3,803
		Starting method			-	Inverter driven	Inverter driven	Inverter driven
		Motor	Crankcase heater	Output	W	-	-	-

2. Outdoor Units

2-1. Specifications

Model Name		Indoor Unit				AE200DN*MPK/EU	AE200DN*MPK/EU	AE200DN*MPK/EU
		Outdoor Unit				AE080CXYDGK/EU	AE120CXYDGK/EU	AE160CXYDGK/EU
Outdoor Unit	Heat exchanger	Length			mm	986/957/928	1,239/1,210/1,182	1,239/1,210/1,182
		Rows	Quantity		EA	3	3	3
		Fin pitch			mm	1.5	1.5	1.5
		Passes	Quantity		EA	9-9	22-12	22-12
		Face area			m²	0.79	1.17	1.17
		Stages	Quantity		EA	38	46	46
		Empty tubeplate hole	Quantity		EA	-	-	-
		Tube type			-	Φ7	Φ7	Φ7
		Fin	Type		-	Corrugate	Corrugate	Corrugate
			Treatment		-	Anti Salt	Anti Salt	Anti Salt
	Fan	Type			-	Propeller Fan	Propeller Fan	Propeller Fan
		Discharge direction				Horizontal	Horizontal	Horizontal
		Air Flow Rate		Heating	m³/min	65	95	95
				Cooling	m³/min	69	90	94
		Quantity			EA	1	1	1
	Fan motor	Quantity			EA	1	1	1
		Model			-	FMDC531SSJ	SIC-88FWJ-F1122-1	SIC-88FWJ-F1122-1
		Output			W	125	122	122
		Drive			-	Direct drive	Direct drive	Direct drive
		Speed	Steps		-	-	-	-
			Heating		rpm	720	590	590
			Cooling		rpm	760	560	580
	Sound Level	Sound Pressure Level		Heating	dB(A)	45	47	51
				Cooling	dB(A)	45	47	51
				Night Mode(3m)	dB(A)	35	35	35
		Sound Power Level		Heating	dB(A)	59	60	65
				Cooling	dB(A)	59	60	65
	Connections	Water pipe		Inlet	-	BSPP male 1"	BSPP male 1"	BSPP male 1"
				Outlet	-	BSPP male 1"	BSPP male 1"	BSPP male 1"
	Casing	Color			-	Shadow Gray	Shadow Gray	Shadow Gray
		Material			-	GI-SGCC	GI-SGCC	GI-SGCC
	Packing	Material			-	EPS/BOX	EPS/BOX	EPS/BOX
		Weight			kg	13	20	20
	External Dimension	Net Weight			kg	98	140	140
		Shipping Weight			kg	108	154	154
		Net Dimensions (WxHxD)			mm	998x850x500	1,270x1,018x530	1,270x1,018x530
		Shipping Dimensions (WxHxD)			mm	1,070x1,018x630	1,330x1,226x630	1,330x1,226x630
	Operating Temp. Range	Heating		Min.	℃	-25	-25	-25
				Max.	℃	35	35	35
		Cooling		Min.	℃	10	10	10
				Max.	℃	46	46	46
		D.Hot Water		Min.	℃	-25	-25	-25
				Max.	℃	43	43	43

NOTE

- Specifications may be subject to change without prior notice.
  1) A2W Condition #1 : (Heating) Water In/Out 30℃/35℃, Outdoor Air 7℃[DB]/6℃[WB];
     (Cooling) Water In/Out 23℃/18℃, Outdoor Air 35℃[DB].
  2) A2W Condition #2 : (Heating) Water In/Out 40℃/45℃, Outdoor Air 7℃[DB]/6℃[WB];
     (Cooling) Water In/Out 12℃/7℃, Outdoor Air 35℃[DB].
  3) A2W Condition #3 : (Heating) Water In/Out 47℃/55℃, Outdoor Air 7℃[DB]/6℃[WB].
  4) A2W Condition : (A2W35) Water In/Out -/35℃, Outdoor Air 2℃[DB]/1℃[WB];
     (A-7/W35) Water In/Out -/35℃, Outdoor Air -7℃[DB]/-(※ Peak Capacity)
- Select wire size based on the value of MCA
- Sound pressure level is obtained in an anechoic room.
  - Sound pressure level is a relative value, depending on the distance and acoustic environment.
  - Sound pressure level may differ depending on operation condition.
  - dBA = A-weighted sound pressure level
  - Reference acoustic pressure 0 dB = 20uPa
- Sound power level is an absolute value that a sound source generates.
  - dBA = A-weighted Sound power level
  - Reference power : 1pW
  - Measured according to ISO 3741
- These products contain R290 (GWP=3) which is fluorinated greenhouse gas.
- The system is operated in (-25℃ ≤ Outdoor temp. < -20℃) condition, but no guarantee of capacity.

2. Outdoor Units

2-1. Specifications

Model Name		Indoor Unit				AE200DN*MPK/EU	AE200DN*MPK/EU	AE200DN*MPK/EU
		Outdoor Unit				AE080BXYDEG/EU	AE120BXYDEG/EU	AE140BXYDEG/EU
Power Supply					Φ, #, V, Hz	1,2,220-240,50	1,2,220-240,50	1,2,220-240,50
System	Mode				-	Heat Pump (A2W)	Heat Pump (A2W)	Heat Pump (A2W)
	Performance	Capacity	Heating	A2W Condition #1. (A7/W30-35)	W	8,000	12,000	14,000
					Btu/h	27,300	40,900	47,800
				A2W condition #2. (A7/W40-45)	W	8,000	12,000	14,000
				A2W condition #3. (A7/W47-55)		8,000	12,000	14,000
				A2/W35 4)*		8,000	12,000	14,000
				A-7/W35 4)*		8,000	12,000	14,000
			Cooling	A2W Condition #1. (A35/W23-18)	W	8,000	12,000	14,000
					Btu/h	27,300	40,900	47,800
				A2W condition #2. (A35/W12-7)	W	7,500	11,500	12,500
	Power	Power Input	Heating	A2W Condition #1. (A7/W30-35)	W	1,600	2,350	2,770
				A2W condition #2. (A7/W40-45)		2,051	3,000	3,544
				A2W condition #3. (A7/W47-55)		2,500	3,529	4,179
				A2/W35 4)*		1,818	2,791	3,333
				A-7/W35 4)*		2,462	3,810	4,516
			Cooling	A2W Condition #1. (A35/W23-18)	W	1,700	2,640	3,140
				A2W condition #2. (A35/W12-7)		2,273	3,594	3,968
		Current Input	Heating	A2W Condition #1.	A	7.56	11.12	13.10
			Cooling			8.04	12.46	14.87
			Heating	A2W condition #2	A	9.69	14.18	16.75
			Cooling			10.74	16.98	18.75
		Current	MCA		A	26.0	32.0	32.0
			MFA		A	28.6	35.2	35.2
	Efficiency	COP (Nominal Heating) A2W condition #1. (A7/W30-35)				5.00	5.11	5.05
		EER (Nominal Cooling) A2W condition #1. (A35/W23-18)				4.71	4.55	4.46
		EER (Nominal Cooling) A2W condition #2. (A35/W12-7)				3.30	3.20	3.15
		COP		A2W condition #2. (A7/W40-45)	W/W	3.90	4.00	3.95
				A2W condition #3. (A7/W47-55)		3.20	3.40	3.35
				A2/W35 4)*		4.40	4.30	4.20
				A-7/W35 4)*		3.25	3.15	3.10
		PdesignH (LWT 35°C)				9,500	12,600	13,600
		PdesignH (LWT 55°C)				9,500	12,600	13,600
		SCOP (35°C)				4.64	4.90	4.83
		SCOP (55°C)				3.38	3.78	3.75
		SCOP Class (35°C)				A+++	A+++	A+++
		SCOP Class (55°C)				A++	A++	A++
		SEER				4.75	5.00	5.00
	Water Connections	Water Flow Rate (Nominal)		Heating	LPM	23.1	34.6	40.4
				Cooling	LPM	23.1	34.6	40.4
		Water Flow Rate		Min	LPM	7	7	7
				Max	LPM	48	58	58
		Water Pressure (Max)			bar	3	3	3
		Water Pipe Type	threaded male	Inlet	Φ, mm	28	28	28
				Outlet	Φ, mm	28	28	28
		Leaving Water Temperature	Min.	Heating	°C	15	15	15
			Max.		°C	70	70	70
			Min.	Cooling	°C	5	5	5
			Max.		°C	25	25	25
	Refrigerant	Type			-	R32	R32	R32
		Factory Charging			kg	2.7	3.3	3.3
					tCO_2e	1.82	2.23	2.23
		Control Method			-	EEV	EEV	EEV
Outdoor Unit	Compressor	Type			-	Scroll	Scroll	Scroll
		Model Name			-	DS2BB5033FVA	DS2BB5033FVA	DS2BB5033FVA
		Oil		Type	-	POE(Kixx RF P85)	POE(Kixx RF P85)	POE(Kixx RF P85)
				Initial Charge	cc	1,100	1,100	1,100
		Quantity			EA	1	1	1
		Output			W	3,622	3,622	3,622
		Startingmethod			-	Inverter driven	Inverter driven	Inverter driven
		Motor	Crankcase heater	Output	W	-	-	-

2. Outdoor Units

2-1. Specifications

Model Name		Indoor Unit			AE200DN*MPK/EU	AE200DN*MPK/EU	AE200DN*MPK/EU
		Outdoor Unit			AE080BXYDEG/EU	AE120BXYDEG/EU	AE140BXYDEG/EU
Outdoor Unit	Heat exchanger	Length		mm	1,224/1,195	1,216/1,187/1,159	1,216/1,187/1,159
		Rows	Quantity	EA	2	3	3
		Fin pitch		mm	1.5	1.5	1.5
		Passes	Quantity	EA	8	11	11
		Face area		m²	1.15	1.15	1.15
		Stages	Quantity	EA	46	46	46
		Empty tubeplate hole	Quantity	EA	-	-	-
		Tube type		Φ	7	7	7
		Fin	Type	-	Corrugate	Corrugate	Corrugate
			Treatment	-	Anti Salt	Anti Salt	Anti Salt
	Fan	Type		-	Propeller Fan	Propeller Fan	Propeller Fan
		Discharge direction			Horizontal	Horizontal	Horizontal
		Air Flow Rate	Heating	m³/min	92	95	95
			Cooling	m³/min	85	90	90
		Quantity		EA	1	1	1
	Fan motor	Quantity		EA	1	1	1
		Model		-	SIC-88FWJ-F1122-1	SIC-88FWJ-F1122-1	SIC-88FWJ-F1122-1
		Output		W	122	122	122
		Drive		-	Direct drive	Direct drive	Direct drive
		Speed	Steps	-	-	-	-
			Heating	rpm	550	590	590
			Cooling	rpm	510	560	580
	Sound	Sound Pressure	Heating	dB(A)	42	46	47
			Cooling	dB(A)	42	46	47
			Night Mode(3m)	dB(A)	35	35	35
		Sound Power	Heating	dB(A)	56	59	60
			Cooling	dB(A)	56	59	60
	Connections	Water pipe	inlet	Φ, inch	BSPP male 1	BSPP male 1	BSPP male 1
			outlet	Φ, inch	BSPP male 1	BSPP male 1	BSPP male 1
	Casing	Color		-	Shadow Gray	Shadow Gray	Shadow Gray
		Material		-	GI-SGCC	GI-SGCC	GI-SGCC
	Packing	Material		-	EPS/BOX	EPS/BOX	EPS/BOX
		Weight		kg	20.0	20.0	20.0
	External Dimension	Net Weight		kg	126.0	137.0	137.0
		Shipping Weight		kg	146.0	157.0	157.0
		Net Dimensions(WxHxD)		mm	1,270 x 1,018 x 530	1,270 x 1,018 x 530	1,270 x 1,018 x 530
		Shipping Dimensions(WxHxD)		mm	1,330 x 1,226 x 630	1,330 x 1,226 x 630	1,330 x 1,226 x 630
	Operating Temp. Range	Heating		°C	-30 ~ 43	-30 ~ 43	-30 ~ 43
		Cooling		°C	10 ~ 46	10 ~ 46	10 ~ 46
		D.Hot Water		°C	-30 ~43	-30 ~43	-30 ~43

NOTE

- Specifications may be subject to change without prior notice.
  1) A2W Condition #1 : (Heating) Water In/Out 30°C/35°C, Outdoor Air 7°C[DB]/6°C[WB];
  (Cooling) Water In/Out 23°C/18°C, Outdoor Air 35°C[DB].
  2) A2W Condition #2 : (Heating) Water In/Out 40°C/45°C, Outdoor Air 7°C[DB]/6°C[WB];
  (Cooling) Water In/Out 12°C/7°C, Outdoor Air 35°C[DB].
  3) A2W Condition #3 : (Heating) Water In/Out 47°C/55°C, Outdoor Air 7°C[DB]/6°C[WB].
  4) A2W Condition : (A2W35) Water In/Out -/35°C, Outdoor Air 2°C[DB]/1°C[WB];
  (A-7/W35) Water In/Out -/35°C, Outdoor Air -7°C[DB]/-(※ Peak Capacity)
- Select wire size based on the value of MCA.
- Soundpressure level is obtained in an anechoic room.
  - Sound pressure level is a relative value, depending on the distance and acoustic environment.
  - Sound pressure level may differ depending on operation condition.
  - dBA = A-weighted sound pressure level
  - Reference acoustic pressure 0 dB = 20uPa
- Sound power level is an absolute value that a sound source generates.
  - dBA = A-weighted Sound power level
  - Reference power : 1pW
  - Measured according to ISO 3741
- These products contain R32 (GWP=675) which is fluorinated greenhouse gas.

2. Outdoor Units

2-1. Specifications

Model Name		Indoor Unit				AE200DN*MPK/EU	AE200DN*MPK/EU	AE200DN*MPK/EU
		Outdoor Unit				AE080BXYDGG/EU	AE120BXYDGG/EU	AE140BXYDGG/EU
Power Supply					Φ, #, V, Hz	3,4,380-415,50	3,4,380-415,50	3,4,380-415,50
System	Mode				-	Heat Pump (A2W)	Heat Pump (A2W)	Heat Pump (A2W)
	Performance	Capacity	Heating	A2W Condition #1. (A7/W30-35)	W	8,000	12,000	14,000
					Btu/h	27,300	40,900	47,800
				A2W condition #2. (A7/W40-45)	W	8,000	12,000	14,000
				A2W condition #3. (A7/W47-55)		8,000	12,000	14,000
				A2/W35 4)*		8,000	12,000	14,000
				A-7/W35 4)*		8,000	12,000	14,000
			Cooling	A2W Condition #1. (A35/W23-18)	W	8,000	12,000	14,000
					Btu/h	27,300	40,900	47,800
				A2W condition #2. (A35/W12-7)	W	7,500	11,500	12,500
	Power	Power Input	Heating	A2W Condition #1. (A7/W30-35)	W	1,600	2,350	2,770
				A2W condition #2. (A7/W40-45)		2,051	3,000	3,544
				A2W condition #3. (A7/W47-55)		2,500	3,529	4,179
				A2/W35 4)*		1,818	2,791	3,333
				A-7/W35 4)*		2,462	3,810	4,516
			Cooling	A2W Condition #1. (A35/W23-18)	W	1,700	2,640	3,140
				A2W condition #2. (A35/W12-7)		2,273	3,594	3,968
		Current Input	Heating	A2W Condition #1.	A	2.51	3.69	4.35
			Cooling			2.67	4.14	4.94
			Heating	A2W condition #2	A	3.22	4.71	5.56
			Cooling			3.92	5.54	6.56
		Current	MCA		A	16.1	16.1	16.1
			MFA		A	17.7	17.7	17.7
	Efficiency	COP (Nominal Heating) A2W condition #1. (A7/W30-35)				5.00	5.11	5.05
		EER (Nominal Cooling) A2W condition #1. (A35/W23-18)				4.71	4.55	4.46
		EER (Nominal Cooling) A2W condition #2. (A35/W12-7)				3.30	3.20	3.15
		COP		A2W condition #2. (A7/W40-45)	W/W	3.90	4.00	3.95
				A2W condition #3. (A7/W47-55)		3.20	3.40	3.35
				A2/W35 4)*		4.40	4.30	4.20
				A-7/W35 4)*		3.25	3.15	3.10
		PdesignH (LWT 35°C)				9,500	12,600	13,600
		PdesignH (LWT 55°C)				9,500	12,600	13,600
		SCOP (35°C)				4.64	4.90	4.83
		SCOP (55°C)				3.38	3.78	3.75
		SCOP Class (35°C)				A+++	A+++	A+++
		SCOP Class (55°C)				A++	A++	A++
		SEER				4.75	5.00	5.00
	Water Connections	Water Flow Rate (Nominal)		Heating	LPM	23.1	34.6	40.4
				Cooling	LPM	23.1	34.6	40.4
		Water Flow Rate		Min	LPM	7	7	7
				Max	LPM	48	58	58
		Water Pressure (Max)			bar	3	3	3
		Water Pipe Type	threaded male	Inlet	Φ, mm	28	28	28
				Outlet	Φ, mm	28	28	28
		Leaving Water Temperature	Min.	Heating	°C	15	15	15
			Max.		°C	70	70	70
			Min.	Cooling	°C	5	5	5
			Max.		°C	25	25	25
	Refrigerant	Type			-	R32	R32	R32
		Factory Charging			kg	2.7	3.3	3.3
					tCO_2e	1.82	2.23	2.23
		Control Method			-	EEV	EEV	EEV
Outdoor Unit	Compressor	Type			-	Scroll	Scroll	Scroll
		Model Name			-	DS2BB5033FVA	DS2BB5033FVA	DS2BB5033FVA
		Oil		Type	-	POE(Kixx RF P85)	POE(Kixx RF P85)	POE(Kixx RF P85)
				Initial Charge	cc	1,100	1,100	1,100
		Quantity			EA	1	1	1
		Output			W	3,622	3,622	3,622
		Startingmethod			-	Inverter driven	Inverter driven	Inverter driven
		Motor	Crankcase heater	Output	W	-	-	-

2. Outdoor Units

2-1. Specifications

Model Name		Indoor Unit			AE200DN*MPK/EU	AE200DN*MPK/EU	AE200DN*MPK/EU
		Outdoor Unit			AE080BXYDGG/EU	AE120BXYDGG/EU	AE140BXYDGG/EU
Outdoor Unit	Heat exchanger	Length		mm	1,224/1,195	1,216/1,187/1,159	1,216/1,187/1,159
		Rows	Quantity	EA	2	3	3
		Fin pitch		mm	1.5	1.5	1.5
		Passes	Quantity	EA	8	11	11
		Face area		m²	1.15	1.15	1.15
		Stages	Quantity	EA	46	46	46
		Empty tubeplate hole	Quantity	EA	-	-	-
		Tube type		Φ	7	7	7
		Fin	Type	-	Corrugate	Corrugate	Corrugate
			Treatment	-	Anti Salt	Anti Salt	Anti Salt
	Fan	Type		-	Propeller Fan	Propeller Fan	Propeller Fan
		Discharge direction			Horizontal	Horizontal	Horizontal
		Air Flow Rate	Heating	m³/min	92	95	95
			Cooling	m³/min	85	90	90
		Quantity		EA	1	1	1
	Fan motor	Quantity		EA	1	1	1
		Model		-	SIC-88FWJ-F1122-1	SIC-88FWJ-F1122-1	SIC-88FWJ-F1122-1
		Output		W	122	122	122
		Drive		-	Direct drive	Direct drive	Direct drive
		Speed	Steps	-	-	-	-
			Heating	rpm	550	590	590
			Cooling	rpm	510	560	580
	Sound	Sound Pressure	Heating	dB(A)	42	46	47
			Cooling	dB(A)	42	46	47
			Night Mode(3m)	dB(A)	35	35	35
		Sound Power	Heating	dB(A)	56	59	60
			Cooling	dB(A)	56	59	60
	Connections	Water pipe	inlet	Φ, inch	BSPP male 1	BSPP male 1	BSPP male 1
			outlet	Φ, inch	BSPP male 1	BSPP male 1	BSPP male 1
	Casing	Color		-	Shadow Gray	Shadow Gray	Shadow Gray
		Material		-	GI-SGCC	GI-SGCC	GI-SGCC
	Packing	Material		-	EPS/BOX	EPS/BOX	EPS/BOX
		Weight		kg	20.0	20.0	20.0
	External Dimension	Net Weight		kg	126.0	137.0	137.0
		Shipping Weight		kg	146.0	157.0	157.0
		Net Dimensions(WxHxD)		mm	1,270 x 1,018 x 530	1,270 x 1,018 x 530	1,270 x 1,018 x 530
		Shipping Dimensions(WxHxD)		mm	1,330 x 1,226 x 630	1,330 x 1,226 x 630	1,330 x 1,226 x 630
	Operating Temp. Range	Heating		°C	-30 ~ 43	-30 ~ 43	-30 ~ 43
		Cooling		°C	10 ~ 46	10 ~ 46	10 ~ 46
		D.Hot Water		°C	-30 ~ 43	-30 ~ 43	-30 ~ 43

NOTE

- Specifications may be subject to change without prior notice.
  1) A2W Condition #1 : (Heating) Water In/Out 30°C/35°C, Outdoor Air 7°C[DB]/6°C[WB];
  (Cooling) Water In/Out 23°C/18°C, Outdoor Air 35°C[DB].
  2) A2W Condition #2 : (Heating) Water In/Out 40°C/45°C, Outdoor Air 7°C[DB]/6°C[WB];
  (Cooling) Water In/Out 12°C/7°C, Outdoor Air 35°C[DB].
  3) A2W Condition #3 : (Heating) Water In/Out 47°C/55°C, Outdoor Air 7°C[DB]/6°C[WB].
  4) A2W Condition : (A2W35) Water In/Out -/35°C, Outdoor Air 2°C[DB]/1°C[WB];
  (A-7/W35) Water In/Out -/35°C, Outdoor Air -7°C[DB]/-(※ Peak Capacity)
- Select wire size based on the value of MCA.
- Soundpressure level is obtained in an anechoic room.
  - Sound pressure level is a relative value, depending on the distance and acoustic environment.
  - Sound pressure level may differ depending on operation condition.
  - dBA = A-weighted sound pressure level
  - Reference acoustic pressure 0 dB = 20uPa
- Sound power level is an absolute value that a sound source generates.
  - dBA = A-weighted Sound power level
  - Reference power : 1pW
  - Measured according to ISO 3741
- These products contain R32 (GWP=675) which is fluorinated greenhouse gas.

2. Outdoor Units

2-1. Specifications

Model Name		Indoor Unit					AE200DN*MPK/EU	AE200DN*MPK/EU	AE200DN*MPK/EU
		Outdoor Unit					AE050RXYDEG/EU	AE080RXYDEG/EU	AE120RXYDEG/EU
Power Supply						Φ, #, V, Hz	1,2,220-240,50	1,2,220-240,50	1,2,220-240,50
Mode						-	Heat Pump (A2W)	Heat Pump (A2W)	Heat Pump (A2W)
	Performance	Capacity	Cooling	A2W Condition #1. (A7/W35) 1)*		W	5,000	7,500	12,000
						Btu/h	17,100	25,600	40,900
			Heating	A2W Condition #1. (A7/W35) 1)*		W	5,000	8,000	12,000
						Btu/h	17,100	27,300	40,900
				A2W condition #2		W	4,800	7,400	11,700
				A2W condition #3			4,300	7,100	11,300
				A2/W35 4)*			4,800	7,000	10,800
				A-7/W35 4)*			5,100	7,350	12,000
	Power	Power Input	Cooling	A2W Condition #1. (A7/W35) 1)*		W	1,140	1,900	2,770
			Heating	A2W Condition #1. (A7/W35) 1)*			1,030	1,770	2,650
				A2W condition #2			1,300	2,120	3,180
				A2W condition #3			1,520	2,530	3,730
				A2/W35 4)*			1,450	2,350	3,300
				A-7/W35 4)*			1,880	3,020	4,710
		Current Input	Cooling	A2W Condition #1. (A7/W35) 1)*		A	5.4	9.1	13.2
			Heating				4.9	8.5	12.2
		Current	MCA			A	16.0	22.0	28.0
			MFA			A	20.0	27.5	35.0
System	Efficiency	EER (Nominal Cooling)					4.39	3.95	4.33
		COP (Nominal Heating) A2W condition #1					4.85	4.52	4.53
		COP		A2W condition #2		W/W	3.69	3.49	3.68
				A2W condition #3			2.83	2.81	3.03
				A2/W35 4)*			3.31	2.98	3.27
				A-7/W35 4)*			2.71	2.43	2.55
		PdesignH		LWT 35°C			5,500	8,000	13,000
				LWT 55°C			5,000	8,000	12,000
		SCOP		35°C			4.46	4.44	4.69
				55°C			3.20	3.23	3.51
		SCOP Class		35°C			A+++	A+++	A+++
				55°C			A++	A++	A++
		SEER					3.98	4.52	5.22
	Water Connections	Water Flow Rate (Nominal) [H/C]				LPM	14.4/14.4	23.1/21.6	34.6/34.6
		Water Flow Rate		Min		LPM	7.0	7.0	12.0
				Max		LPM	48.0	48.0	58.0
		Water Pressure (Max)				bar	3	3	3
		Water Pipe Type	threaded male	Inlet		Φ, mm	28	28	28
				Outlet		Φ, mm	28	28	28
		Leaving Water Temperature	min/max	Heating		°C	15~65	15~65	15~65
				Cooling		°C	5~25	5~25	5~25
	Refrigerant	Type				-	R32	R32	R32
		Factory Charging				kg	1.00	1.15	2.20
						tCO_2e	0.68	0.78	1.49
		Control Method				-	EEV	EEV	EEV
Outdoor Unit	Compressor	Type				-	BLDC Twin Rotary	BLDC Twin Rotary	BLDC Twin Rotary
		Model Name				-	UB4TN8200FE4SS	UB8TN8265FJWSG	UB5TN5450FJXSG
		Oil		Type		-	POE	POE	POE
				Initial Charge		cc	650	700	1,700
		Quantity				EA	1	1	1
		Output				W	1623	2078	3613
		Starting method				-	Inverter driven	Inverter driven	Inverter driven

2. Outdoor Units

2-1. Specifications

Model Name		Indoor Unit			AE200DN*MPK/EU	AE200DN*MPK/EU	AE200DN*MPK/EU
		Outdoor Unit			AE050RXYDEG/EU	AE080RXYDEG/EU	AE120RXYDEG/EU
Outdoor Unit	Heat exchanger	Length		mm	730	850	950
		Rows	Quantity	EA	2	2	2
		Fin pitch		mm	1.5	1.5	1.5
		Passes	Quantity	EA	6	8	10
		Face area		m²	0.55	0.82	1.32
		Stages	Quantity	EA	36	46	66
		Tube type		-	Φ7	Φ7	Φ7.94
		Fin	Type	-	Corrugate	Wide Louver	G-Fin
			Treatment	-	NGS	Anti Salt	Anti Salt
	Fan	Type		-	Propeller Fan	Propeller Fan	Propeller Fan
		Discharge direction		-	Horizontal	Horizontal	Horizontal
		Air Flow Rate	Heating	m³/min	51	66	99
			Cooling	m³/min	51	66	99
	Fan motor	Quantity		EA	1	1	2
		Model		-	Brushless DC motor	Brushless DC motor	Brushless DC motor
		Output		W X EA	98	125	125 X 2
		Drive		-	Direct drive	Direct drive	Direct drive
		Speed	Heating	rpm	760	780	650
			Cooling	rpm	760	780	650
	Sound	Sound Pressure	Heating	dB(A)	45	48	50
			Cooling	dB(A)	45	48	50
		Sound Power	Heating	dB(A)	61	63	64
			Cooling	dB(A)	62	64	65
	Connections	Water pipe	inlet	-	BSPP male 1"	BSPP male 1"	BSPP male 1"
			outlet	-	BSPP male 1"	BSPP male 1"	BSPP male 1"
	Casing	Color		-	Earth brown	Earth brown	Earth brown
		Material		-	Poweder coated Galvanised steel	Poweder coated Electro galvanized steel	Poweder coated Electro galvanized steel
	Packing	Material		-	EPS/BOX	EPS/BOX	EPS/BOX
		Weight		kg	4.0	8.5	9.0
	External Dimension	Net Weight		kg	58.5	76.0	110.0
		Shipping Weight		kg	62.5	84.5	119.0
		Net Dimensions (WxHxD)		mm	880 x 798 x 310	940 x 998 x 330	940 x 1,420 x 330
		Shipping Dimensions (WxHxD)		mm	1,023 x 904 x 413	995 x 1,178 x 426	995 x 1,598 x 426
	Operating Temp. Range	Heating		°C	-25~35	-25~35	-25~35
		Cooling		°C	10~46	10~46	10~46
		D.Hot Water		°C	-25~43	-25~43	-25~43

NOTE

- Specifications may be subject to change without prior notice.
  1)* A2W Condition #1 : (Heating) Water In/Out 30°C/35°C,
  Outdoor Air 7°C[DB]/6°C[WB]; (Cooling) Water In/Out 23°C/18°C, Outdoor Air 35°C[DB].
  2)* A2W Condition #2 : (Heating) Water In/Out 40°C/45°C,
  Outdoor Air 7°C[DB]/6°C[WB]; (Cooling) Water In/Out 12°C/7°C, Outdoor Air 35°C[DB].
  3)* A2W Condition #3 : (Heating) Water In/Out 47°C/55°C, Outdoor Air 7°C[DB]/6°C[WB].
  4)* A2W Condition : (A2W35) Water In/Out -/35°C,
  Outdoor Air 2°C[DB]/1°C[WB]; (A-7/W35) Water In/Out -/35°C, Outdoor Air -7°C[DB]/-(※ Peak Capacity)
- Select wire size based on the value of MCA
- Sound pressure level is obtained in an anechoic room.
  - Sound pressure level is a relative value, depending on the distance and acoustic environment.
  - Sound pressure level may differ depending on operation condition.
  - dBA = A-weighted sound pressure level
  - Reference acoustic pressure 0 dB = 20uPa
- Sound power level is an absolute value that a sound source generates.
  - dBA = A-weighted Sound power level
  - Reference power : 1pW
  - Measured according to ISO 3741
- These products contain R32 (GWP=675) which is fluorinated greenhouse gas.
- The system is operated in (-25°C ≤ Outdoor temp. < -20°C) condition, but no guarantee of capacity.
- The system is operated by only Booster Heater in special condition (35 °C < Outdoor temp. ≤ 43°C).

2. Outdoor Units

2-1. Specifications

Model Name		Indoor Unit					AE200DN*MPK/EU	AE200DN*MPK/EU	AE200DN*MPK/EU	AE200DN*MPK/EU
		Outdoor Unit					AE160RXYDEG/EU	AE080RXYDGG/EU	AE120RXYDGG/EU	AE160RXYDGG/EU
Power Supply						Φ, #, V, Hz	1,2,220-240,50	3,4,380-415,50	3,4,380-415,50	3,4,380-415,50
Mode						-	Heat Pump (A2W)	Heat Pump (A2W)	Heat Pump (A2W)	Heat Pump (A2W)
	Performance	Capacity	Cooling	A2W Condition #1. (A7/W35) 1)*		W	14,000	7,500	12,000	14,000
						Btu/h	47,800	25,600	40,900	47,800
			Heating	A2W Condition #1. (A7/W35) 1)*		W	16,000	8,000	12,000	16,000
						Btu/h	54,600	27,300	40,900	54,600
				A2W condition #2		W	15,400	7,400	11,700	15,400
				A2W condition #3			15,000	7,100	11,300	15,000
				A2/W35 4)*			13,200	7,000	10,800	13,200
				A-7/W35 4)*			14,600	7,350	12,000	14,600
	Power	Power Input	Cooling	A2W Condition #1. (A7/W35) 1)*		W	3,280	1,900	2,770	3,280
			Heating	A2W Condition #1. (A7/W35) 1)*			3,620	1,770	2,650	3,620
				A2W condition #2			4,490	2,120	3,180	4,490
				A2W condition #3			5,180	2,530	3,730	5,180
				A2/W35 4)*			4,400	2,350	3,300	4,400
				A-7/W35 4)*			6,000	3,020	4,710	6,000
		Current Input	Cooling	A2W Condition #1. (A7/W35) 1)*		A	15.7	3.0	4.4	5.3
			Heating				17.0	2.8	4.1	5.7
		Current	MCA			A	32.0	10.0	10.0	12.0
			MFA			A	40.0	16.1	16.1	16.1
System	Efficiency	EER (Nominal Cooling)					4.27	3.95	4.33	4.27
		COP (Nominal Heating) A2W condition #1					4.42	4.52	4.53	4.42
		COP		A2W condition #2		W/W	3.43	3.49	3.68	3.43
				A2W condition #3			2.90	2.81	3.03	2.90
				A2/W35 4)*			3.00	2.98	3.27	3.00
				A-7/W35 4)*			2.43	2.43	2.55	2.43
		PdesignH		LWT 35°C			16,000	8,000	13,000	16,000
				LWT 55°C			16,000	8,000	12,000	16,000
		SCOP		35°C			4.48	4.44	4.69	4.48
				55°C			3.53	3.23	3.51	3.53
		SCOP Class		35°C			A+++	A+++	A+++	A+++
				55°C			A++	A++	A++	A++
		SEER					5.31	4.52	5.22	5.31
	Water Connections	Water Flow Rate (Nominal) [H/C]				LPM	46.2/40.4	23.1/21.6	34.6/34.6	46.2/40.4
		Water Flow Rate		Min		LPM	12.0	7.0	12.0	12.0
				Max		LPM	58.0	48.0	58.0	58.0
		Water Pressure (Max)				bar	3	3	3	3
		Water Pipe Type	threaded male	Inlet		Φ, mm	28	28	28	28
				Outlet		Φ, mm	28	28	28	28
		Leaving Water Temperature	min/max	Heating		°C	15~65	15~65	15~65	15~65
				Cooling		°C	5~25	5~25	5~25	5~25
	Refrigerant	Type				-	R32	R32	R32	R32
		Factory Charging				kg	2.20	1.15	2.20	2.20
						tCO_2e	1.49	0.78	1.49	1.49
		Control Method				-	EEV	EEV	EEV	EEV
Outdoor Unit	Compressor	Type				-	BLDC Twin Rotary	BLDC Twin Rotary	BLDC Twin Rotary	BLDC Twin Rotary
		Model Name				-	UB5TN5450FJXSG	UB8TN8265FJWSG	UB5TN5450FJXSG	UB5TN5450FJXSG
		Oil		Type		-	POE	POE	POE	POE
				Initial Charge		cc	1,700	700	1,700	1,700
		Quantity				EA	1	1	1	1
		Output				W	3613	2078	3613	3613
		Starting method				-	Inverter driven	Inverter driven	Inverter driven	Inverter driven

2. Outdoor Units

2-1. Specifications

Model Name		Indoor Unit				AE200DN*MPK/EU	AE200DN*MPK/EU	AE200DN*MPK/EU	AE200DN*MPK/EU
		Outdoor Unit				AE160RXYDEG/EU	AE080RXYDGG/EU	AE120RXYDGG/EU	AE160RXYDGG/EU
Outdoor Unit	Heat exchanger	Length			mm	950	850	950	950
		Rows	Quantity		EA	2	2	2	2
		Fin pitch			mm	1.5	1.5	1.5	1.5
		Passes	Quantity		EA	10	8	10	10
		Face area			m²	1.32	0.82	1.32	1.32
		Stages	Quantity		EA	66	46	66	66
		Tube type			-	Φ7.94	Φ7	Φ7.94	Φ7.94
		Fin	Type		-	G-Fin	Wide Louver	G-Fin	G-Fin
			Treatment		-	Anti Salt	Anti Salt	Anti Salt	Anti Salt
	Fan	Type			-	Propeller Fan	Propeller Fan	Propeller Fan	Propeller Fan
		Discharge direction			-	Horizontal	Horizontal	Horizontal	Horizontal
		Air Flow Rate		Heating	m³/min	118	66	99	118
				Cooling	m³/min	118	66	99	118
	Fan motor	Quantity			EA	2	1	2	2
		Model			-	Brushless DC motor	Brushless DC motor	Brushless DC motor	Brushless DC motor
		Output			W X EA	125 X 2	125	125 X 2	125 X 2
		Drive			-	Direct drive	Direct drive	Direct drive	Direct drive
		Speed	Heating		rpm	750	780	650	750
			Cooling		rpm	750	780	650	750
	Sound	Sound Pressure		Heating	dB(A)	52	48	50	52
				Cooling	dB(A)	54	48	50	54
		Sound Power		Heating	dB(A)	66	63	64	66
				Cooling	dB(A)	68	64	65	68
	Connections	Water pipe		inlet	-	BSPP male 1"	BSPP male 1"	BSPP male 1"	BSPP male 1"
				outlet	-	BSPP male 1"	BSPP male 1"	BSPP male 1"	BSPP male 1"
	Casing	Color			-	Earth brown	Earth brown	Earth brown	Earth brown
		Material			-	Poweder coated Electro galvanized steel	Poweder coated Electro galvanized steel	Poweder coated Electro galvanized steel	Poweder coated Electro galvanized steel
	Packing	Material			-	EPS/BOX	EPS/BOX	EPS/BOX	EPS/BOX
		Weight			kg	9.0	8.5	9.0	9.0
	External Dimension	Net Weight			kg	110.0	75.0	111.0	111.0
		Shipping Weight			kg	119.0	83.5	120.0	120.0
		Net Dimensions (WxHxD)			mm	940 x 1,420 x 330	940 x 998 x 330	940 x 1,420 x 330	940 x 1,420 x 330
		Shipping Dimensions (WxHxD)			mm	995 x 1,598 x 426	995 x 1,178 x 426	995 x 1,598 x 426	995 x 1,598 x 426
	Operating Temp. Range	Heating			°C	-25~35	-25~35	-25~35	-25~35
		Cooling			°C	10~46	10~46	10~46	10~46
		D.Hot Water			°C	-25~43	-25~43	-25~43	-25~43

NOTE

- Specifications may be subject to change without prior notice.
  1)* A2W Condition #1 : (Heating) Water In/Out 30°C/35°C,
  Outdoor Air 7°C[DB]/6°C[WB]; (Cooling) Water In/Out 23°C/18°C, Outdoor Air 35°C[DB].
  2)* A2W Condition #2 : (Heating) Water In/Out 40°C/45°C,
  Outdoor Air 7°C[DB]/6°C[WB]; (Cooling) Water In/Out 12°C/7°C, Outdoor Air 35°C[DB].
  3)* A2W Condition #3 : (Heating) Water In/Out 47°C/55°C, Outdoor Air 7°C[DB]/6°C[WB].
  4)* A2W Condition : (A2W35) Water In/Out -/35°C,
  Outdoor Air 2°C[DB]/1°C[WB]; (A-7/W35) Water In/Out -/35°C, Outdoor Air -7°C[DB]/-(※ Peak Capacity)
- Select wire size based on the value of MCA
- Sound pressure level is obtained in an anechoic room.
  - Sound pressure level is a relative value, depending on the distance and acoustic environment.
  - Sound pressure level may differ depending on operation condition.
  - dBA = A-weighted sound pressure level
  - Reference acoustic pressure 0 dB = 20uPa
- Sound power level is an absolute value that a sound source generates.
  - dBA = A-weighted Sound power level
  - Reference power : 1pW
  - Measured according to ISO 3741
- These products contain R32 (GWP=675) which is fluorinated greenhouse gas.
- The system is operated in (-25°C ≤ Outdoor temp. < -20°C) condition, but no guarantee of capacity.
- The system is operated by only Booster Heater in special condition (35 °C < Outdoor temp. ≤ 43°C).

2. Outdoor Units

2-1. Specifications

Model Name		Indoor Unit				AE160DN*MPK/EU	AE160DN*MPK/EU
		Outdoor Unit				AE050CXYDEK/EU	AE080CXYDEK/EU
Power Supply					Φ, #, V, Hz	1, 2, 220~240, 50	1, 2, 220~240, 50
System	Mode				-	Heat Pump (A2W)	Heat Pump (A2W)
	Performance	Capacity	Heating	A2W Condition #1. (A7/W35) 1)*	W	5,000	8,000
					Btu/h	17,100	27,300
				A2W condition #2	W	5,000	8,000
				A2W condition #3		5,000	8,000
				A2/W35 4)*		5,000	8,000
				A-7/W35 4)*		5,000	8,000
			Cooling	A2W Condition #1. (A35/W18) 1)*	W	5,000	8,000
					Btu/h	17,100	27,300
				A2W condition #2	W	3,900	5,700
	Power	Power Input	Heating	A2W Condition #1. (A7/W35) 1)*	W	980	1,630
				A2W condition #2		1,320	2,160
				A2W condition #3		1,610	2,670
				A2/W35 4)*		1,160	1,900
				A-7/W35 4)*		1,670	2,670
			Cooling	A2W Condition #1. (A35/W18) 1)*	W	1,280	2,050
				A2W condition #2		1,279	1,900
		Current Input	Heating	A2W Condition #1.	A	4.63	7.70
			Cooling			6.05	9.69
			Heating	A2W condition #2	A	6.24	10.21
			Cooling			7.61	12.62
		Current	MCA		A	16.1	26.0
			MFA		A	17.6	28.6
	Efficiency	COP (Nominal Heating) A2W condition #1				5.10	4.91
		EER (Nominal Cooling) A2W condition #1				3.91	3.90
		EER (Nominal Cooling) A2W condition #2				3.05	3.00
		COP		A2W condition #2	W/W	3.80	3.70
				A2W condition #3		3.10	3.00
				A2/W35 4)*		4.30	4.20
				A-7/W35 4)*		3.00	3.00
		PdesignH (LWT 35°C)				5,500	8,000
		PdesignH (LWT 55°C)				5,500	8,000
		SCOP (35°C)				5.10	4.85
		SCOP (55°C)				3.60	3.55
		SCOP Class (35°C)				A+++	A+++
		SCOP Class (55°C)				A++	A++
		SEER				4.20	4.30
	Water Connections	Water Flow Rate (Nominal)		Heating	LPM	14.4	23.1
				Cooling	LPM	14.4	23.1
		Water Flow Rate		Min	LPM	7	7
				Max	LPM	48	48
		Water Pressure (Max)			bar	3	3
		Water Pipe Type	threaded male	Inlet	Φ, mm	28	28
				Outlet	Φ, mm	28	28
		Leaving Water Temperature	Min.	Heating	°C	15	15
			Max.		°C	75	75
			Min.	Cooling	°C	5	5
			Max.		°C	25	25
	Refrigerant	Type			-	R290	R290
		Factory Charging			g	630	870
					tCO_2e	0.00189	0.00261
		Control Method			-	EEV	EEV
Outdoor Unit	Compressor	Type			-	Rotary	Rotary
		Model Name			-	UF8HC5180FEU	UF5HC5260FEX
		Oil		Type	-	Mineral	Mineral
				Initial Charge	cc	590	850
		Quantity			EA	1	1
		Output			W	1,551	2,236
		Starting method			-	Inverter driven	Inverter driven
		Motor	Crankcase heater	Output	W	-	-

2. Outdoor Units

2-1. Specifications

Model Name		Indoor Unit				AE160DN*MPK/EU	AE160DN*MPK/EU
		Outdoor Unit				AE050CXYDEK/EU	AE080CXYDEK/EU
Outdoor Unit	Heat exchanger	Length			mm	986/957	986/957/928
		Rows	Quantity		EA	2	3
		Fin pitch			mm	1.5	1.5
		Passes	Quantity		EA	6-6	9-9
		Face area			m²	0.79	0.79
		Stages	Quantity		EA	38	38
		Empty tubeplate hole	Quantity		EA	-	-
		Tube type			-	Φ7	Φ7
		Fin	Type		-	Corrugate	Corrugate
			Treatment		-	Anti Salt	Anti Salt
	Fan	Type			-	Propeller Fan	Propeller Fan
		Discharge direction				Horizontal	Horizontal
		Air Flow Rate		Heating	m³/min	52	65
				Cooling	m³/min	55	69
		Quantity			EA	1	1
	Fan motor	Quantity			EA	1	1
		Model			-	FMDC531SSJ	FMDC531SSJ
		Output			W	125	125
		Drive			-	Direct drive	Direct drive
		Speed	Steps		-	-	-
			Heating		rpm	550	720
			Cooling		rpm	580	760
	Sound Level	Sound Pressure Level		Heating	dB(A)	41	45
				Cooling	dB(A)	41	45
				Night Mode(3m)	dB(A)	35	35
		Sound Power Level		Heating	dB(A)	55	59
				Cooling	dB(A)	55	59
	Connections	Water pipe		Inlet	-	BSPP male 1"	BSPP male 1"
				Outlet	-	BSPP male 1"	BSPP male 1"
	Casing	Color			-	Shadow Gray	Shadow Gray
		Material			-	GI-SGCC	GI-SGCC
	Packing	Material			-	EPS/BOX	EPS/BOX
		Weight			kg	13	13
	External Dimension	Net Weight			kg	86	98
		Shipping Weight			kg	96	108
		Net Dimensions (WxHxD)			mm	998x850x500	998x850x500
		Shipping Dimensions (WxHxD)			mm	1,070x1,018x630	1,070x1,018x630
	Operating Temp. Range	Heating		Min.	℃	-25	-25
				Max.	℃	35	35
		Cooling		Min.	℃	10	10
				Max.	℃	46	46
		D.Hot Water		Min.	℃	-25	-25
				Max.	℃	43	43

NOTE

- Specifications may be subject to change without prior notice.
  1) A2W Condition #1 : (Heating) Water In/Out 30℃/35℃, Outdoor Air 7℃[DB]/6℃[WB];
     (Cooling) Water In/Out 23℃/18℃, Outdoor Air 35℃[DB].
  2) A2W Condition #2 : (Heating) Water In/Out 40℃/45℃, Outdoor Air 7℃[DB]/6℃[WB];
     (Cooling) Water In/Out 12℃/7℃, Outdoor Air 35℃[DB].
  3) A2W Condition #3 : (Heating) Water In/Out 47℃/55℃, Outdoor Air 7℃[DB]/6℃[WB].
  4) A2W Condition : (A2W35) Water In/Out -/35℃, Outdoor Air 2℃[DB]/1℃[WB];
     (A-7/W35) Water In/Out -/35℃, Outdoor Air -7℃[DB]/-(※ Peak Capacity)
- Select wire size based on the value of MCA
- Sound pressure level is obtained in an anechoic room.
  - Sound pressure level is a relative value, depending on the distance and acoustic environment.
  - Sound pressure level may differ depending on operation condition.
  - dBA = A-weighted sound pressure level
  - Reference acoustic pressure 0 dB = 20uPa
- Sound power level is an absolute value that a sound source generates.
  - dBA = A-weighted Sound power level
  - Reference power : 1pW
  - Measured according to ISO 3741
- These products contain R290 (GWP=3) which is fluorinated greenhouse gas.
- The system is operated in (-25℃ ≤ Outdoor temp. < -20℃) condition, but no guarantee of capacity.

2. Outdoor Units

2-1. Specifications

Model Name		Indoor Unit				AE160DN*MPK/EU	AE160DN*MPK/EU
		Outdoor Unit				AE120CXYDEK/EU	AE160CXYDEK/EU
Power Supply					Φ, #, V, Hz	1, 2, 220~240, 50	1, 2, 220~240, 50
System	Mode				-	Heat Pump (A2W)	Heat Pump (A2W)
	Performance	Capacity	Heating	A2W Condition #1. (A7/W35) 1)*	W	12,000	16,000
					Btu/h	40,900	54,600
				A2W condition #2	W	12,000	16,000
				A2W condition #3		12,000	16,000
				A2/W35 4)*		12,000	16,000
				A-7/W35 4)*		12,000	16,000
			Cooling	A2W Condition #1. (A35/W18) 1)*	W	12,000	14,000
					Btu/h	40,900	47,800
				A2W condition #2	W	9,000	10,400
	Power	Power Input	Heating	A2W Condition #1. (A7/W35) 1)*	W	2,500	3,550
				A2W condition #2		3,240	4,570
				A2W condition #3		4,000	5,520
				A2/W35 4)*		2,790	4,100
				A-7/W35 4)*		4,000	5,710
			Cooling	A2W Condition #1. (A35/W18) 1)*	W	3,000	3,680
				A2W condition #2		3,103	3,586
		Current Input	Heating	A2W Condition #1.	A	11.81	16.78
			Cooling			14.18	17.39
			Heating	A2W condition #2	A	15.31	21.60
			Cooling			18.90	26.09
		Current	MCA		A	32.0	32.0
			MFA		A	35.2	35.2
	Efficiency	COP (Nominal Heating) A2W condition #1				4.80	4.51
		EER (Nominal Cooling) A2W condition #1				4.00	3.80
		EER (Nominal Cooling) A2W condition #2				2.90	2.90
		COP		A2W condition #2	W/W	3.70	3.50
				A2W condition #3		3.00	2.90
				A2/W35 4)*		4.30	3.90
				A-7/W35 4)*		3.00	2.80
		PdesignH (LWT 35°C)				12,000	15,500
		PdesignH (LWT 55°C)				12,000	14,500
		SCOP (35°C)				4.90	4.70
		SCOP (55°C)				3.65	3.55
		SCOP Class (35°C)				A+++	A+++
		SCOP Class (55°C)				A++	A++
		SEER				4.80	5.00
	Water Connections	Water Flow Rate (Nominal)		Heating	LPM	34.6	46.2
				Cooling	LPM	34.6	40.4
		Water Flow Rate		Min	LPM	7	7
				Max	LPM	58	58
		Water Pressure (Max)			bar	3	3
		Water Pipe Type	threaded male	Inlet	Φ, mm	28	28
				Outlet	Φ, mm	28	28
		Leaving Water Temperature	Min.	Heating	°C	15	15
			Max.		°C	75	75
			Min.	Cooling	°C	5	5
			Max.		°C	25	25
	Refrigerant	Type			-	R290	R290
		Factory Charging			g	1,250	1,250
					tCO_2e	0.00375	0.00375
		Control Method			-	EEV	EEV
Outdoor Unit	Compressor	Type			-	Scroll	Scroll
		Model Name			-	DS4HC5066FNA	DS4HC5066FNA
		Oil		Type	-	Kixx RF P85	Kixx RF P85
				Initial Charge	cc	1,100	1,100
		Quantity			EA	1	1
		Output			W	3,803	3,803
		Starting method			-	Inverter driven	Inverter driven
		Motor	Crankcase heater	Output	W	-	-

2. Outdoor Units

2-1. Specifications

Model Name		Indoor Unit				AE160DN*MPK/EU	AE160DN*MPK/EU
		Outdoor Unit				AE120CXYDEK/EU	AE160CXYDEK/EU
Outdoor Unit	Heat exchanger	Length			mm	1,239/1,210/1,182	1,239/1,210/1,182
		Rows	Quantity		EA	3	3
		Fin pitch			mm	1.5	1.5
		Passes	Quantity		EA	22-12	22-12
		Face area			m²	1.17	1.17
		Stages	Quantity		EA	46	46
		Empty tubeplate hole	Quantity		EA	-	-
		Tube type			-	Φ7	Φ7
		Fin	Type		-	Corrugate	Corrugate
			Treatment		-	Anti Salt	Anti Salt
	Fan	Type			-	Propeller Fan	Propeller Fan
		Discharge direction				Horizontal	Horizontal
		Air Flow Rate		Heating	m³/min	95	95
				Cooling	m³/min	90	90
		Quantity			EA	1	1
	Fan motor	Quantity			EA	1	1
		Model			-	SIC-88FWJ-F1122-1	SIC-88FWJ-F1122-1
		Output			W	122	122
		Drive			-	Direct drive	Direct drive
		Speed	Steps		-	-	-
			Heating		rpm	590	590
			Cooling		rpm	560	580
	Sound	Sound Pressure		Heating	dB(A)	47	51
				Cooling	dB(A)	47	51
				Night Mode(3m)	dB(A)	35	35
		Sound Power		Heating	dB(A)	60	65
				Cooling	dB(A)	60	65
	Connections	Water pipe		inlet	-	BSPP male 1"	BSPP male 1"
				outlet	-	BSPP male 1"	BSPP male 1"
	Casing	Color			-	Shadow Gray	Shadow Gray
		Material			-	GI-SGCC	GI-SGCC
	Packing	Material			-	EPS/BOX	EPS/BOX
		Weight			kg	20	20
	External Dimension	Net Weight			kg	140	140
		Shipping Weight			kg	154	154
		Net Dimensions (WxHxD)			mm	1,270x1,018x530	1,270x1,018x530
		Shipping Dimensions (WxHxD)			mm	1,330x1,226x630	1,330x1,226x630
	Operating Temp. Range	Heating		Min.	℃	-25	-25
				Max.	℃	35	35
		Cooling		Min.	℃	10	10
				Max.	℃	46	46
		D.Hot Water		Min.	℃	-25	-25
				Max.	℃	43	43

NOTE

- Specifications may be subject to change without prior notice.
  1) A2W Condition #1 : (Heating) Water In/Out 30℃/35℃, Outdoor Air 7℃[DB]/6℃[WB];
     (Cooling) Water In/Out 23℃/18℃, Outdoor Air 35℃[DB].
  2) A2W Condition #2 : (Heating) Water In/Out 40℃/45℃, Outdoor Air 7℃[DB]/6℃[WB];
     (Cooling) Water In/Out 12℃/7℃, Outdoor Air 35℃[DB].
  3) A2W Condition #3 : (Heating) Water In/Out 47℃/55℃, Outdoor Air 7℃[DB]/6℃[WB].
  4) A2W Condition : (A2W35) Water In/Out -/35℃, Outdoor Air 2℃[DB]/1℃[WB];
     (A-7/W35) Water In/Out -/35℃, Outdoor Air -7℃[DB]/-(※ Peak Capacity)
- Select wire size based on the value of MCA
- Sound pressure level is obtained in an anechoic room.
  - Sound pressure level is a relative value, depending on the distance and acoustic environment.
  - Sound pressure level may differ depending on operation condition.
  - dBA = A-weighted sound pressure level
  - Reference acoustic pressure 0 dB = 20uPa
- Sound power level is an absolute value that a sound source generates.
  - dBA = A-weighted Sound power level
  - Reference power : 1pW
  - Measured according to ISO 3741
- These products contain R290 (GWP=3) which is fluorinated greenhouse gas.
- The system is operated in (-25℃ ≤ Outdoor temp. < -20℃) condition, but no guarantee of capacity.

2. Outdoor Units

2-1. Specifications

Model Name		Indoor Unit					AE160DN*MPK/EU	AE160DN*MPK/EU	AE160DN*MPK/EU
		Outdoor Unit					AE080CXYDGK/EU	AE120CXYDGK/EU	AE160CXYDGK/EU
Power Supply						Φ, #, V, Hz	3, 4, 380~415, 50	3, 4, 380~415, 50	3, 4, 380~415, 50
System	Mode					-	Heat Pump (A2W)	Heat Pump (A2W)	Heat Pump (A2W)
	Performance	Capacity	Heating	A2W Condition #1. (A7/W35) 1)*		W	8,000	12,000	16,000
						Btu/h	27,300	40,900	54,600
				A2W condition #2		W	8,000	12,000	16,000
				A2W condition #3			8,000	12,000	16,000
				A2/W35 4)*			8,000	12,000	16,000
				A-7/W35 4)*			8,000	12,000	16,000
			Cooling	A2W Condition #1. (A35/W18) 1)*		W	8,000	12,000	14,000
						Btu/h	27,300	40,900	47,800
				A2W condition #2		W	5,700	9,000	10,400
	Power	Power Input	Heating	A2W Condition #1. (A7/W35) 1)*		W	1,630	2,500	3,550
				A2W condition #2			2,160	3,240	4,570
				A2W condition #3			2,670	4,000	5,520
				A2/W35 4)*			1,900	2,790	4,100
				A-7/W35 4)*			2,670	4,000	5,710
			Cooling	A2W Condition #1. (A35/W18) 1)*		W	2,050	3,000	3,680
				A2W condition #2			1,900	3,103	3,714
		Current Input	Heating	A2W Condition #1.		A	2.56	3.92	5.57
			Cooling				3.22	4.71	5.77
			Heating	A2W condition #2		A	3.39	5.08	7.17
			Cooling				4.19	6.28	8.66
		Current	MCA			A	16.1	16.1	16.1
			MFA			A	17.7	17.7	17.7
	Efficiency	COP (Nominal Heating) A2W condition #1					4.91	4.80	4.51
		EER (Nominal Cooling) A2W condition #1					3.90	4.00	3.80
		EER (Nominal Cooling) A2W condition #2					3.00	2.90	2.90
		COP		A2W condition #2		W/W	3.70	3.70	3.50
				A2W condition #3			3.00	3.00	2.90
				A2/W35 4)*			4.20	4.30	3.90
				A-7/W35 4)*			3.00	3.00	2.80
		PdesignH (LWT 35°C)					8,000	12,000	15,500
		PdesignH (LWT 55°C)					8,000	12,000	15,500
		SCOP (35°C)					4.85	4.90	4.70
		SCOP (55°C)					3.55	3.65	3.55
		SCOP Class (35°C)					A+++	A+++	A+++
		SCOP Class (55°C)					A++	A++	A++
		SEER					4.30	4.80	5.00
	Water Connections	Water Flow Rate (Nominal)		Heating		LPM	23.1	34.6	46.2
				Cooling		LPM	23.1	34.6	40.4
		Water Flow Rate		Min		LPM	7	7	7
				Max		LPM	48	58	58
		Water Pressure (Max)				bar	3	3	3
		Water Pipe Type	threaded male	Inlet		Φ, mm	28	28	28
				Outlet		Φ, mm	28	28	28
		Leaving Water Temperature	Min.	Heating		°C	15	15	15
			Max.			°C	75	75	75
			Min.	Cooling		°C	5	5	5
			Max.			°C	25	25	25
	Refrigerant	Type				-	R290	R290	R290
		Factory Charging				g	870	1,250	1,250
						tCO_2e	0.00261	0.00375	0.00375
		Control Method				-	EEV	EEV	EEV
Outdoor Unit	Compressor	Type				-	Rotary	Scroll	Scroll
		Model Name				-	UF5HC5260FEX	DS4HC5066FNA	DS4HC5066FNA
		Oil		Type		-	Mineral	Kixx RF P85	Kixx RF P85
				Initial Charge		cc	850	1,100	1,100
		Quantity				EA	1	1	1
		Output				W	2,236	3,803	3,803
		Starting method				-	Inverter driven	Inverter driven	Inverter driven
		Motor	Crankcase heater	Output		W	-	-	-

2. Outdoor Units

2-1. Specifications

Model Name		Indoor Unit				AE160DN*MPK/EU	AE160DN*MPK/EU	AE160DN*MPK/EU
		Outdoor Unit				AE080CXYDGK/EU	AE120CXYDGK/EU	AE160CXYDGK/EU
Outdoor Unit	Heat exchanger	Length			mm	986/957/928	1,239/1,210/1,182	1,239/1,210/1,182
		Rows	Quantity		EA	3	3	3
		Fin pitch			mm	1.5	1.5	1.5
		Passes	Quantity		EA	9-9	22-12	22-12
		Face area			m²	0.79	1.17	1.17
		Stages	Quantity		EA	38	46	46
		Empty tubeplate hole	Quantity		EA	-	-	-
		Tube type			-	Φ7	Φ7	Φ7
		Fin	Type		-	Corrugate	Corrugate	Corrugate
			Treatment		-	Anti Salt	Anti Salt	Anti Salt
	Fan	Type			-	Propeller Fan	Propeller Fan	Propeller Fan
		Discharge direction				Horizontal	Horizontal	Horizontal
		Air Flow Rate		Heating	m³/min	65	95	95
				Cooling	m³/min	69	90	94
		Quantity			EA	1	1	1
	Fan motor	Quantity			EA	1	1	1
		Model			-	FMDC531SSJ	SIC-88FWJ-F1122-1	SIC-88FWJ-F1122-1
		Output			W	125	122	122
		Drive			-	Direct drive	Direct drive	Direct drive
		Speed	Steps		-	-	-	-
			Heating		rpm	720	590	590
			Cooling		rpm	760	560	580
	Sound Level	Sound Pressure Level		Heating	dB(A)	45	47	51
				Cooling	dB(A)	45	47	51
				Night Mode(3m)	dB(A)	35	35	35
		Sound Power Level		Heating	dB(A)	59	60	65
				Cooling	dB(A)	59	60	65
	Connections	Water pipe		Inlet	-	BSPP male 1"	BSPP male 1"	BSPP male 1"
				Outlet	-	BSPP male 1"	BSPP male 1"	BSPP male 1"
	Casing	Color			-	Shadow Gray	Shadow Gray	Shadow Gray
		Material			-	GI-SGCC	GI-SGCC	GI-SGCC
	Packing	Material			-	EPS/BOX	EPS/BOX	EPS/BOX
		Weight			kg	13	20	20
	External Dimension	Net Weight			kg	98	140	140
		Shipping Weight			kg	108	154	154
		Net Dimensions (WxHxD)			mm	998x850x500	1,270x1,018x530	1,270x1,018x530
		Shipping Dimensions (WxHxD)			mm	1,070x1,018x630	1,330x1,226x630	1,330x1,226x630
	Operating Temp. Range	Heating		Min.	℃	-25	-25	-25
				Max.	℃	35	35	35
		Cooling		Min.	℃	10	10	10
				Max.	℃	46	46	46
		D.Hot Water		Min.	℃	-25	-25	-25
				Max.	℃	43	43	43

NOTE

- Specifications may be subject to change without prior notice.
  1) A2W Condition #1 : (Heating) Water In/Out 30℃/35℃, Outdoor Air 7℃[DB]/6℃[WB];
     (Cooling) Water In/Out 23℃/18℃, Outdoor Air 35℃[DB].
  2) A2W Condition #2 : (Heating) Water In/Out 40℃/45℃, Outdoor Air 7℃[DB]/6℃[WB];
     (Cooling) Water In/Out 12℃/7℃, Outdoor Air 35℃[DB].
  3) A2W Condition #3 : (Heating) Water In/Out 47℃/55℃, Outdoor Air 7℃[DB]/6℃[WB].
  4) A2W Condition : (A2W35) Water In/Out -/35℃, Outdoor Air 2℃[DB]/1℃[WB];
     (A-7/W35) Water In/Out -/35℃, Outdoor Air -7℃[DB]/-(※ Peak Capacity)
- Select wire size based on the value of MCA
- Sound pressure level is obtained in an anechoic room.
  - Sound pressure level is a relative value, depending on the distance and acoustic environment.
  - Sound pressure level may differ depending on operation condition.
  - dBA = A-weighted sound pressure level
  - Reference acoustic pressure 0 dB = 20uPa
- Sound power level is an absolute value that a sound source generates.
  - dBA = A-weighted Sound power level
  - Reference power : 1pW
  - Measured according to ISO 3741
- These products contain R290 (GWP=3) which is fluorinated greenhouse gas.
- The system is operated in (-25℃ ≤ Outdoor temp. < -20℃) condition, but no guarantee of capacity.

2. Outdoor Units

2-1. Specifications

Model Name		Indoor Unit				AE160DN*MPK/EU	AE160DN*MPK/EU	AE160DN*MPK/EU
		Outdoor Unit				AE080BXYDEG/EU	AE120BXYDEG/EU	AE140BXYDEG/EU
Power Supply					Φ, #, V, Hz	1,2,220-240,50	1,2,220-240,50	1,2,220-240,50
System	Mode				-	Heat Pump (A2W)	Heat Pump (A2W)	Heat Pump (A2W)
	Performance	Capacity	Heating	A2W Condition #1. (A7/W30-35)	W	8,000	12,000	14,000
					Btu/h	27,300	40,900	47,800
				A2W condition #2. (A7/W40-45)	W	8,000	12,000	14,000
				A2W condition #3. (A7/W47-55)		8,000	12,000	14,000
				A2/W35 4)*		8,000	12,000	14,000
				A-7/W35 4)*		8,000	12,000	14,000
			Cooling	A2W Condition #1. (A35/W23-18)	W	8,000	12,000	14,000
					Btu/h	27,300	40,900	47,800
				A2W condition #2. (A35/W12-7)	W	7,500	11,500	12,500
	Power	Power Input	Heating	A2W Condition #1. (A7/W30-35)	W	1,600	2,350	2,770
				A2W condition #2. (A7/W40-45)		2,051	3,000	3,544
				A2W condition #3. (A7/W47-55)		2,500	3,529	4,179
				A2/W35 4)*		1,818	2,791	3,333
				A-7/W35 4)*		2,462	3,810	4,516
			Cooling	A2W Condition #1. (A35/W23-18)	W	1,700	2,640	3,140
				A2W condition #2. (A35/W12-7)		2,273	3,594	3,968
		Current Input	Heating	A2W Condition #1.	A	7.56	11.12	13.10
			Cooling			8.04	12.46	14.87
			Heating	A2W condition #2	A	9.69	14.18	16.75
			Cooling			10.74	16.98	18.75
		Current	MCA		A	26.0	32.0	32.0
			MFA		A	28.6	35.2	35.2
	Efficiency	COP (Nominal Heating) A2W condition #1. (A7/W30-35)				5.00	5.11	5.05
		EER (Nominal Cooling) A2W condition #1. (A35/W23-18)				4.71	4.55	4.46
		EER (Nominal Cooling) A2W condition #2. (A35/W12-7)				3.30	3.20	3.15
		COP		A2W condition #2. (A7/W40-45)	W/W	3.90	4.00	3.95
				A2W condition #3. (A7/W47-55)		3.20	3.40	3.35
				A2/W35 4)*		4.40	4.30	4.20
				A-7/W35 4)*		3.25	3.15	3.10
		PdesignH (LWT 35°C)				9,500	12,600	13,600
		PdesignH (LWT 55°C)				9,500	12,600	13,600
		SCOP (35°C)				4.64	4.90	4.83
		SCOP (55°C)				3.38	3.78	3.75
		SCOP Class (35°C)				A+++	A+++	A+++
		SCOP Class (55°C)				A++	A++	A++
		SEER				4.75	5.00	5.00
	Water Connections	Water Flow Rate (Nominal)		Heating	LPM	23.1	34.6	40.4
				Cooling	LPM	23.1	34.6	40.4
		Water Flow Rate		Min	LPM	7	7	7
				Max	LPM	48	58	58
		Water Pressure (Max)			bar	3	3	3
		Water Pipe Type	threaded male	Inlet	Φ, mm	28	28	28
				Outlet	Φ, mm	28	28	28
		Leaving Water Temperature	Min.	Heating	°C	15	15	15
			Max.		°C	70	70	70
			Min.	Cooling	°C	5	5	5
			Max.		°C	25	25	25
	Refrigerant	Type			-	R32	R32	R32
		Factory Charging			kg	2.7	3.3	3.3
					tCO_2e	1.82	2.23	2.23
		Control Method			-	EEV	EEV	EEV
Outdoor Unit	Compressor	Type			-	Scroll	Scroll	Scroll
		Model Name			-	DS2BB5033FVA	DS2BB5033FVA	DS2BB5033FVA
		Oil		Type	-	POE(Kixx RF P85)	POE(Kixx RF P85)	POE(Kixx RF P85)
				Initial Charge	cc	1,100	1,100	1,100
		Quantity			EA	1	1	1
		Output			W	3,622	3,622	3,622
		Startingmethod			-	Inverter driven	Inverter driven	Inverter driven
		Motor	Crankcase heater	Output	W	-	-	-

2. Outdoor Units

2-1. Specifications

Model Name		Indoor Unit			AE160DN*MPK/EU	AE160DN*MPK/EU	AE160DN*MPK/EU
		Outdoor Unit			AE080BXYDEG/EU	AE120BXYDEG/EU	AE140BXYDEG/EU
Outdoor Unit	Heat exchanger	Length		mm	1,224/1,195	1,216/1,187/1,159	1,216/1,187/1,159
		Rows	Quantity	EA	2	3	3
		Fin pitch		mm	1.5	1.5	1.5
		Passes	Quantity	EA	8	11	11
		Face area		m²	1.15	1.15	1.15
		Stages	Quantity	EA	46	46	46
		Empty tubeplate hole	Quantity	EA	-	-	-
		Tube type		Φ	7	7	7
		Fin	Type	-	Corrugate	Corrugate	Corrugate
			Treatment	-	Anti Salt	Anti Salt	Anti Salt
	Fan	Type		-	Propeller Fan	Propeller Fan	Propeller Fan
		Discharge direction			Horizontal	Horizontal	Horizontal
		Air Flow Rate	Heating	m³/min	92	95	95
			Cooling	m³/min	85	90	90
		Quantity		EA	1	1	1
	Fan motor	Quantity		EA	1	1	1
		Model		-	SIC-88FWJ-F1122-1	SIC-88FWJ-F1122-1	SIC-88FWJ-F1122-1
		Output		W	122	122	122
		Drive		-	Direct drive	Direct drive	Direct drive
		Speed	Steps	-	-	-	-
			Heating	rpm	550	590	590
			Cooling	rpm	510	560	580
	Sound	Sound Pressure	Heating	dB(A)	42	46	47
			Cooling	dB(A)	42	46	47
			Night Mode(3m)	dB(A)	35	35	35
		Sound Power	Heating	dB(A)	56	59	60
			Cooling	dB(A)	56	59	60
	Connections	Water pipe	inlet	Φ, inch	BSPP male 1	BSPP male 1	BSPP male 1
			outlet	Φ, inch	BSPP male 1	BSPP male 1	BSPP male 1
	Casing	Color		-	Shadow Gray	Shadow Gray	Shadow Gray
		Material		-	GI-SGCC	GI-SGCC	GI-SGCC
	Packing	Material		-	EPS/BOX	EPS/BOX	EPS/BOX
		Weight		kg	20.0	20.0	20.0
	External Dimension	Net Weight		kg	126.0	137.0	137.0
		Shipping Weight		kg	146.0	157.0	157.0
		Net Dimensions(WxHxD)		mm	1,270 x 1,018 x 530	1,270 x 1,018 x 530	1,270 x 1,018 x 530
		Shipping Dimensions(WxHxD)		mm	1,330 x 1,226 x 630	1,330 x 1,226 x 630	1,330 x 1,226 x 630
	Operating Temp. Range	Heating		°C	-30 ~ 43	-30 ~ 43	-30 ~ 43
		Cooling		°C	10 ~ 46	10 ~ 46	10 ~ 46
		D.Hot Water		°C	-30 ~43	-30 ~43	-30 ~43

NOTE

- Specifications may be subject to change without prior notice.
  1) A2W Condition #1 : (Heating) Water In/Out 30°C/35°C, Outdoor Air 7°C[DB]/6°C[WB];
  (Cooling) Water In/Out 23°C/18°C, Outdoor Air 35°C[DB].
  2) A2W Condition #2 : (Heating) Water In/Out 40°C/45°C, Outdoor Air 7°C[DB]/6°C[WB];
  (Cooling) Water In/Out 12°C/7°C, Outdoor Air 35°C[DB].
  3) A2W Condition #3 : (Heating) Water In/Out 47°C/55°C, Outdoor Air 7°C[DB]/6°C[WB].
  4) A2W Condition : (A2W35) Water In/Out -/35°C, Outdoor Air 2°C[DB]/1°C[WB];
  (A-7/W35) Water In/Out -/35°C, Outdoor Air -7°C[DB]/-(※ Peak Capacity)
- Select wire size based on the value of MCA.
- Soundpressure level is obtained in an anechoic room.
  - Sound pressure level is a relative value, depending on the distance and acoustic environment.
  - Sound pressure level may differ depending on operation condition.
  - dBA = A-weighted sound pressure level
  - Reference acoustic pressure 0 dB = 20uPa
- Sound power level is an absolute value that a sound source generates.
  - dBA = A-weighted Sound power level
  - Reference power : 1pW
  - Measured according to ISO 3741
- These products contain R32 (GWP=675) which is fluorinated greenhouse gas.

2. Outdoor Units

2-1. Specifications

Model Name		Indoor Unit				AE160DN*MPK/EU	AE160DN*MPK/EU	AE160DN*MPK/EU
		Outdoor Unit				AE080BXYDGG/EU	AE120BXYDGG/EU	AE140BXYDGG/EU
Power Supply					Φ, #, V, Hz	3,4,380-415,50	3,4,380-415,50	3,4,380-415,50
System	Mode				-	Heat Pump (A2W)	Heat Pump (A2W)	Heat Pump (A2W)
	Performance	Capacity	Heating	A2W Condition #1. (A7/W30-35)	W	8,000	12,000	14,000
					Btu/h	27,300	40,900	47,800
				A2W condition #2. (A7/W40-45)	W	8,000	12,000	14,000
				A2W condition #3. (A7/W47-55)		8,000	12,000	14,000
				A2/W35 4)*		8,000	12,000	14,000
				A-7/W35 4)*		8,000	12,000	14,000
			Cooling	A2W Condition #1. (A35/W23-18)	W	8,000	12,000	14,000
					Btu/h	27,300	40,900	47,800
				A2W condition #2. (A35/W12-7)	W	7,500	11,500	12,500
	Power	Power Input	Heating	A2W Condition #1. (A7/W30-35)	W	1,600	2,350	2,770
				A2W condition #2. (A7/W40-45)		2,051	3,000	3,544
				A2W condition #3. (A7/W47-55)		2,500	3,529	4,179
				A2/W35 4)*		1,818	2,791	3,333
				A-7/W35 4)*		2,462	3,810	4,516
			Cooling	A2W Condition #1. (A35/W23-18)	W	1,700	2,640	3,140
				A2W condition #2. (A35/W12-7)		2,273	3,594	3,968
		Current Input	Heating	A2W Condition #1.	A	2.51	3.69	4.35
			Cooling			2.67	4.14	4.94
			Heating	A2W condition #2	A	3.22	4.71	5.56
			Cooling			3.92	5.54	6.56
		Current	MCA		A	16.1	16.1	16.1
			MFA		A	17.7	17.7	17.7
	Efficiency	COP (Nominal Heating) A2W condition #1. (A7/W30-35)				5.00	5.11	5.05
		EER (Nominal Cooling) A2W condition #1. (A35/W23-18)				4.71	4.55	4.46
		EER (Nominal Cooling) A2W condition #2. (A35/W12-7)				3.30	3.20	3.15
		COP		A2W condition #2. (A7/W40-45)	W/W	3.90	4.00	3.95
				A2W condition #3. (A7/W47-55)		3.20	3.40	3.35
				A2/W35 4)*		4.40	4.30	4.20
				A-7/W35 4)*		3.25	3.15	3.10
		PdesignH (LWT 35°C)				9,500	12,600	13,600
		PdesignH (LWT 55°C)				9,500	12,600	13,600
		SCOP (35°C)				4.64	4.90	4.83
		SCOP (55°C)				3.38	3.78	3.75
		SCOP Class (35°C)				A+++	A+++	A+++
		SCOP Class (55°C)				A++	A++	A++
		SEER				4.75	5.00	5.00
	Water Connections	Water Flow Rate (Nominal)		Heating	LPM	23.1	34.6	40.4
				Cooling	LPM	23.1	34.6	40.4
		Water Flow Rate		Min	LPM	7	7	7
				Max	LPM	48	58	58
		Water Pressure (Max)			bar	3	3	3
		Water Pipe Type	threaded male	Inlet	Φ, mm	28	28	28
				Outlet	Φ, mm	28	28	28
		Leaving Water Temperature	Min.	Heating	°C	15	15	15
			Max.		°C	70	70	70
			Min.	Cooling	°C	5	5	5
			Max.		°C	25	25	25
	Refrigerant	Type			-	R32	R32	R32
		Factory Charging			kg	2.7	3.3	3.3
					tCO_2e	1.82	2.23	2.23
		Control Method			-	EEV	EEV	EEV
Outdoor Unit	Compressor	Type			-	Scroll	Scroll	Scroll
		Model Name			-	DS2BB5033FVA	DS2BB5033FVA	DS2BB5033FVA
		Oil		Type	-	POE(Kixx RF P85)	POE(Kixx RF P85)	POE(Kixx RF P85)
				Initial Charge	cc	1,100	1,100	1,100
		Quantity			EA	1	1	1
		Output			W	3,622	3,622	3,622
		Startingmethod			-	Inverter driven	Inverter driven	Inverter driven
		Motor	Crankcase heater	Output	W	-	-	-

2. Outdoor Units

2-1. Specifications

Model Name		Indoor Unit			AE160DN*MPK/EU	AE160DN*MPK/EU	AE160DN*MPK/EU
		Outdoor Unit			AE080BXYDGG/EU	AE120BXYDGG/EU	AE140BXYDGG/EU
Outdoor Unit	Heat exchanger	Length		mm	1,224/1,195	1,216/1,187/1,159	1,216/1,187/1,159
		Rows	Quantity	EA	2	3	3
		Fin pitch		mm	1.5	1.5	1.5
		Passes	Quantity	EA	8	11	11
		Face area		m²	1.15	1.15	1.15
		Stages	Quantity	EA	46	46	46
		Empty tubeplate hole	Quantity	EA	-	-	-
		Tube type		Φ	7	7	7
		Fin	Type	-	Corrugate	Corrugate	Corrugate
			Treatment	-	Anti Salt	Anti Salt	Anti Salt
	Fan	Type		-	Propeller Fan	Propeller Fan	Propeller Fan
		Discharge direction			Horizontal	Horizontal	Horizontal
		Air Flow Rate	Heating	m³/min	92	95	95
			Cooling	m³/min	85	90	90
		Quantity		EA	1	1	1
	Fan motor	Quantity		EA	1	1	1
		Model		-	SIC-88FWJ-F1122-1	SIC-88FWJ-F1122-1	SIC-88FWJ-F1122-1
		Output		W	122	122	122
		Drive		-	Direct drive	Direct drive	Direct drive
		Speed	Steps	-	-	-	-
			Heating	rpm	550	590	590
			Cooling	rpm	510	560	580
	Sound	Sound Pressure	Heating	dB(A)	42	46	47
			Cooling	dB(A)	42	46	47
			Night Mode(3m)	dB(A)	35	35	35
		Sound Power	Heating	dB(A)	56	59	60
			Cooling	dB(A)	56	59	60
	Connections	Water pipe	inlet	Φ, inch	BSPP male 1	BSPP male 1	BSPP male 1
			outlet	Φ, inch	BSPP male 1	BSPP male 1	BSPP male 1
	Casing	Color		-	Shadow Gray	Shadow Gray	Shadow Gray
		Material		-	GI-SGCC	GI-SGCC	GI-SGCC
	Packing	Material		-	EPS/BOX	EPS/BOX	EPS/BOX
		Weight		kg	20.0	20.0	20.0
	External Dimension	Net Weight		kg	126.0	137.0	137.0
		Shipping Weight		kg	146.0	157.0	157.0
		Net Dimensions(WxHxD)		mm	1,270 x 1,018 x 530	1,270 x 1,018 x 530	1,270 x 1,018 x 530
		Shipping Dimensions(WxHxD)		mm	1,330 x 1,226 x 630	1,330 x 1,226 x 630	1,330 x 1,226 x 630
	Operating Temp. Range	Heating		°C	-30 ~ 43	-30 ~ 43	-30 ~ 43
		Cooling		°C	10 ~ 46	10 ~ 46	10 ~ 46
		D.Hot Water		°C	-30 ~ 43	-30 ~ 43	-30 ~ 43

NOTE

- Specifications may be subject to change without prior notice.
  1) A2W Condition #1 : (Heating) Water In/Out 30°C/35°C, Outdoor Air 7°C[DB]/6°C[WB];
  (Cooling) Water In/Out 23°C/18°C, Outdoor Air 35°C[DB].
  2) A2W Condition #2 : (Heating) Water In/Out 40°C/45°C, Outdoor Air 7°C[DB]/6°C[WB];
  (Cooling) Water In/Out 12°C/7°C, Outdoor Air 35°C[DB].
  3) A2W Condition #3 : (Heating) Water In/Out 47°C/55°C, Outdoor Air 7°C[DB]/6°C[WB].
  4) A2W Condition : (A2W35) Water In/Out -/35°C, Outdoor Air 2°C[DB]/1°C[WB];
  (A-7/W35) Water In/Out -/35°C, Outdoor Air -7°C[DB]/-(※ Peak Capacity)
- Select wire size based on the value of MCA.
- Soundpressure level is obtained in an anechoic room.
  - Sound pressure level is a relative value, depending on the distance and acoustic environment.
  - Sound pressure level may differ depending on operation condition.
  - dBA = A-weighted sound pressure level
  - Reference acoustic pressure 0 dB = 20uPa
- Sound power level is an absolute value that a sound source generates.
  - dBA = A-weighted Sound power level
  - Reference power : 1pW
  - Measured according to ISO 3741
- These products contain R32 (GWP=675) which is fluorinated greenhouse gas.

2. Outdoor Units

2-1. Specifications

Model Name		Indoor Unit				AE160DN*MPK/EU	AE160DN*MPK/EU	AE160DN*MPK/EU
		Outdoor Unit				AE050RXYDEG/EU	AE080RXYDEG/EU	AE120RXYDEG/EU
Power Supply					Φ, #, V, Hz	1,2,220-240,50	1,2,220-240,50	1,2,220-240,50
Mode					-	Heat Pump (A2W)	Heat Pump (A2W)	Heat Pump (A2W)
	Performance	Capacity	Cooling	A2W Condition #1. (A7/W35) 1)*	W	5,000	7,500	12,000
					Btu/h	17,100	25,600	40,900
			Heating	A2W Condition #1. (A7/W35) 1)*	W	5,000	8,000	12,000
					Btu/h	17,100	27,300	40,900
				A2W condition #2	W	4,800	7,400	11,700
				A2W condition #3		4,300	7,100	11,300
				A2/W35 4)*		4,800	7,000	10,800
				A-7/W35 4)*		5,100	7,350	12,000
	Power	Power Input	Cooling	A2W Condition #1. (A7/W35) 1)*	W	1,140	1,900	2,770
			Heating	A2W Condition #1. (A7/W35) 1)*		1,030	1,770	2,650
				A2W condition #2		1,300	2,120	3,180
				A2W condition #3		1,520	2,530	3,730
				A2/W35 4)*		1,450	2,350	3,300
				A-7/W35 4)*		1,880	3,020	4,710
		Current Input	Cooling	A2W Condition #1. (A7/W35) 1)*	A	5.4	9.1	13.2
			Heating			4.9	8.5	12.2
		Current	MCA		A	16.0	22.0	28.0
			MFA		A	20.0	27.5	35.0
System	Efficiency	EER (Nominal Cooling)				4.39	3.95	4.33
		COP (Nominal Heating) A2W condition #1				4.85	4.52	4.53
		COP		A2W condition #2	W/W	3.69	3.49	3.68
				A2W condition #3		2.83	2.81	3.03
				A2/W35 4)*		3.31	2.98	3.27
				A-7/W35 4)*		2.71	2.43	2.55
		PdesignH		LWT 35°C		5,500	8,000	13,000
				LWT 55°C		5,000	8,000	12,000
		SCOP		35°C		4.46	4.44	4.69
				55°C		3.20	3.23	3.51
		SCOP Class		35°C		A+++	A+++	A+++
				55°C		A++	A++	A++
		SEER				3.98	4.52	5.22
	Water Connections	Water Flow Rate (Nominal) [H/C]			LPM	14.4/14.4	23.1/21.6	34.6/34.6
		Water Flow Rate		Min	LPM	7.0	7.0	12.0
				Max	LPM	48.0	48.0	58.0
		Water Pressure (Max)			bar	3	3	3
		Water Pipe Type	threaded male	Inlet	Φ, mm	28	28	28
				Outlet	Φ, mm	28	28	28
		Leaving Water Temperature	min/max	Heating	°C	15~65	15~65	15~65
				Cooling	°C	5~25	5~25	5~25
	Refrigerant	Type			-	R32	R32	R32
		Factory Charging			kg	1.00	1.15	2.20
					tCO_2e	0.68	0.78	1.49
		Control Method			-	EEV	EEV	EEV
Outdoor Unit	Compressor	Type			-	BLDC Twin Rotary	BLDC Twin Rotary	BLDC Twin Rotary
		Model Name			-	UB4TN8200FE4SS	UB8TN8265FJWSG	UB5TN5450FJXSG
		Oil		Type	-	POE	POE	POE
				Initial Charge	cc	650	700	1,700
		Quantity			EA	1	1	1
		Output			W	1623	2078	3613
		Starting method			-	Inverter driven	Inverter driven	Inverter driven

2. Outdoor Units

2-1. Specifications

Model Name		Indoor Unit			AE160DN*MPK/EU	AE160DN*MPK/EU	AE160DN*MPK/EU
		Outdoor Unit			AE050RXYDEG/EU	AE080RXYDEG/EU	AE120RXYDEG/EU
Outdoor Unit	Heat exchanger	Length		mm	730	850	950
		Rows	Quantity	EA	2	2	2
		Fin pitch		mm	1.5	1.5	1.5
		Passes	Quantity	EA	6	8	10
		Face area		m²	0.55	0.82	1.32
		Stages	Quantity	EA	36	46	66
		Tube type		-	Φ7	Φ7	Φ7.94
		Fin	Type	-	Corrugate	Wide Louver	G-Fin
			Treatment	-	NGS	Anti Salt	Anti Salt
	Fan	Type		-	Propeller Fan	Propeller Fan	Propeller Fan
		Discharge direction		-	Horizontal	Horizontal	Horizontal
		Air Flow Rate	Heating	m³/min	51	66	99
			Cooling	m³/min	51	66	99
	Fan motor	Quantity		EA	1	1	2
		Model		-	Brushless DC motor	Brushless DC motor	Brushless DC motor
		Output		W X EA	98	125	125 X 2
		Drive		-	Direct drive	Direct drive	Direct drive
		Speed	Heating	rpm	760	780	650
			Cooling	rpm	760	780	650
	Sound	Sound Pressure	Heating	dB(A)	45	48	50
			Cooling	dB(A)	45	48	50
		Sound Power	Heating	dB(A)	61	63	64
			Cooling	dB(A)	62	64	65
	Connections	Water pipe	inlet	-	BSPP male 1"	BSPP male 1"	BSPP male 1"
			outlet	-	BSPP male 1"	BSPP male 1"	BSPP male 1"
	Casing	Color		-	Earth brown	Earth brown	Earth brown
		Material		-	Poweder coated Galvanised steel	Poweder coated Electro galvanized steel	Poweder coated Electro galvanized steel
	Packing	Material		-	EPS/BOX	EPS/BOX	EPS/BOX
		Weight		kg	4.0	8.5	9.0
	External Dimension	Net Weight		kg	58.5	76.0	110.0
		Shipping Weight		kg	62.5	84.5	119.0
		Net Dimensions (WxHxD)		mm	880 x 798 x 310	940 x 998 x 330	940 x 1,420 x 330
		Shipping Dimensions (WxHxD)		mm	1,023 x 904 x 413	995 x 1,178 x 426	995 x 1,598 x 426
	Operating Temp. Range	Heating		°C	-25~35	-25~35	-25~35
		Cooling		°C	10~46	10~46	10~46
		D.Hot Water		°C	-25~43	-25~43	-25~43

NOTE

- Specifications may be subject to change without prior notice.
  1)* A2W Condition #1 : (Heating) Water In/Out 30°C/35°C,
  Outdoor Air 7°C[DB]/6°C[WB]; (Cooling) Water In/Out 23°C/18°C, Outdoor Air 35°C[DB].
  2)* A2W Condition #2 : (Heating) Water In/Out 40°C/45°C,
  Outdoor Air 7°C[DB]/6°C[WB]; (Cooling) Water In/Out 12°C/7°C, Outdoor Air 35°C[DB].
  3)* A2W Condition #3 : (Heating) Water In/Out 47°C/55°C, Outdoor Air 7°C[DB]/6°C[WB].
  4)* A2W Condition : (A2W35) Water In/Out -/35°C,
  Outdoor Air 2°C[DB]/1°C[WB]; (A-7/W35) Water In/Out -/35°C, Outdoor Air -7°C[DB]/-(※ Peak Capacity)
- Select wire size based on the value of MCA
- Sound pressure level is obtained in an anechoic room.
  - Sound pressure level is a relative value, depending on the distance and acoustic environment.
  - Sound pressure level may differ depending on operation condition.
  - dBA = A-weighted sound pressure level
  - Reference acoustic pressure 0 dB = 20uPa
- Sound power level is an absolute value that a sound source generates.
  - dBA = A-weighted Sound power level
  - Reference power : 1pW
  - Measured according to ISO 3741
- These products contain R32 (GWP=675) which is fluorinated greenhouse gas.
- The system is operated in (-25°C ≤ Outdoor temp. < -20°C) condition, but no guarantee of capacity.
- The system is operated by only Booster Heater in special condition (35 °C < Outdoor temp. ≤ 43°C).

2. Outdoor Units

2-1. Specifications

Model Name		Indoor Unit					AE160DN*MPK/EU	AE160DN*MPK/EU	AE160DN*MPK/EU	AE160DN*MPK/EU
		Outdoor Unit					AE160RXYDEG/EU	AE080RXYDGG/EU	AE120RXYDGG/EU	AE160RXYDGG/EU
Power Supply						Φ, #, V, Hz	1,2,220-240,50	3,4,380-415,50	3,4,380-415,50	3,4,380-415,50
Mode						-	Heat Pump (A2W)	Heat Pump (A2W)	Heat Pump (A2W)	Heat Pump (A2W)
	Performance	Capacity	Cooling	A2W Condition #1. (A7/W35) 1)*		W	14,000	7,500	12,000	14,000
						Btu/h	47,800	25,600	40,900	47,800
			Heating	A2W Condition #1. (A7/W35) 1)*		W	16,000	8,000	12,000	16,000
						Btu/h	54,600	27,300	40,900	54,600
				A2W condition #2		W	15,400	7,400	11,700	15,400
				A2W condition #3			15,000	7,100	11,300	15,000
				A2/W35 4)*			13,200	7,000	10,800	13,200
				A-7/W35 4)*			14,600	7,350	12,000	14,600
	Power	Power Input	Cooling	A2W Condition #1. (A7/W35) 1)*		W	3,280	1,900	2,770	3,280
			Heating	A2W Condition #1. (A7/W35) 1)*			3,620	1,770	2,650	3,620
				A2W condition #2			4,490	2,120	3,180	4,490
				A2W condition #3			5,180	2,530	3,730	5,180
				A2/W35 4)*			4,400	2,350	3,300	4,400
				A-7/W35 4)*			6,000	3,020	4,710	6,000
		Current Input	Cooling	A2W Condition #1. (A7/W35) 1)*		A	15.7	3.0	4.4	5.3
			Heating				17.0	2.8	4.1	5.7
		Current	MCA			A	32.0	10.0	10.0	12.0
			MFA			A	40.0	16.1	16.1	16.1
System	Efficiency	EER (Nominal Cooling)					4.27	3.95	4.33	4.27
		COP (Nominal Heating) A2W condition #1					4.42	4.52	4.53	4.42
		COP		A2W condition #2		W/W	3.43	3.49	3.68	3.43
				A2W condition #3			2.90	2.81	3.03	2.90
				A2/W35 4)*			3.00	2.98	3.27	3.00
				A-7/W35 4)*			2.43	2.43	2.55	2.43
		PdesignH		LWT 35°C			16,000	8,000	13,000	16,000
				LWT 55°C			16,000	8,000	12,000	16,000
		SCOP		35°C			4.48	4.44	4.69	4.48
				55°C			3.53	3.23	3.51	3.53
		SCOP Class		35°C			A+++	A+++	A+++	A+++
				55°C			A++	A++	A++	A++
		SEER					5.31	4.52	5.22	5.31
	Water Connections	Water Flow Rate (Nominal) [H/C]				LPM	46.2/40.4	23.1/21.6	34.6/34.6	46.2/40.4
		Water Flow Rate		Min		LPM	12.0	7.0	12.0	12.0
				Max		LPM	58.0	48.0	58.0	58.0
		Water Pressure (Max)				bar	3	3	3	3
		Water Pipe Type	threaded male	Inlet		Φ, mm	28	28	28	28
				Outlet		Φ, mm	28	28	28	28
		Leaving Water Temperature	min/max	Heating		°C	15~65	15~65	15~65	15~65
				Cooling		°C	5~25	5~25	5~25	5~25
	Refrigerant	Type				-	R32	R32	R32	R32
		Factory Charging				kg	2.20	1.15	2.20	2.20
						tCO_2e	1.49	0.78	1.49	1.49
		Control Method				-	EEV	EEV	EEV	EEV
Outdoor Unit	Compressor	Type				-	BLDC Twin Rotary	BLDC Twin Rotary	BLDC Twin Rotary	BLDC Twin Rotary
		Model Name				-	UB5TN5450FJXSG	UB8TN8265FJWSG	UB5TN5450FJXSG	UB5TN5450FJXSG
		Oil		Type		-	POE	POE	POE	POE
				Initial Charge		cc	1,700	700	1,700	1,700
		Quantity				EA	1	1	1	1
		Output				W	3613	2078	3613	3613
		Starting method				-	Inverter driven	Inverter driven	Inverter driven	Inverter driven

2. Outdoor Units

2-1. Specifications

Model Name		Indoor Unit			AE160DN*MPK/EU	AE160DN*MPK/EU	AE160DN*MPK/EU	AE160DN*MPK/EU
		Outdoor Unit			AE160RXYDEG/EU	AE080RXYDGG/EU	AE120RXYDGG/EU	AE160RXYDGG/EU
Outdoor Unit	Heat exchanger	Length		mm	950	850	950	950
		Rows	Quantity	EA	2	2	2	2
		Fin pitch		mm	1.5	1.5	1.5	1.5
		Passes	Quantity	EA	10	8	10	10
		Face area		m²	1.32	0.82	1.32	1.32
		Stages	Quantity	EA	66	46	66	66
		Tube type		-	Φ7.94	Φ7	Φ7.94	Φ7.94
		Fin	Type	-	G-Fin	Wide Louver	G-Fin	G-Fin
			Treatment	-	Anti Salt	Anti Salt	Anti Salt	Anti Salt
	Fan	Type		-	Propeller Fan	Propeller Fan	Propeller Fan	Propeller Fan
		Discharge direction		-	Horizontal	Horizontal	Horizontal	Horizontal
		Air Flow Rate	Heating	m³/min	118	66	99	118
			Cooling	m³/min	118	66	99	118
	Fan motor	Quantity		EA	2	1	2	2
		Model		-	Brushless DC motor	Brushless DC motor	Brushless DC motor	Brushless DC motor
		Output		W X EA	125 X 2	125	125 X 2	125 X 2
		Drive		-	Direct drive	Direct drive	Direct drive	Direct drive
		Speed	Heating	rpm	750	780	650	750
			Cooling	rpm	750	780	650	750
	Sound	Sound Pressure	Heating	dB(A)	52	48	50	52
			Cooling	dB(A)	54	48	50	54
		Sound Power	Heating	dB(A)	66	63	64	66
			Cooling	dB(A)	68	64	65	68
	Connections	Water pipe	inlet	-	BSPP male 1"	BSPP male 1"	BSPP male 1"	BSPP male 1"
			outlet	-	BSPP male 1"	BSPP male 1"	BSPP male 1"	BSPP male 1"
	Casing	Color		-	Earth brown	Earth brown	Earth brown	Earth brown
		Material		-	Poweder coated Electro galvanized steel	Poweder coated Electro galvanized steel	Poweder coated Electro galvanized steel	Poweder coated Electro galvanized steel
	Packing	Material		-	EPS/BOX	EPS/BOX	EPS/BOX	EPS/BOX
		Weight		kg	9.0	8.5	9.0	9.0
	External Dimension	Net Weight		kg	110.0	75.0	111.0	111.0
		Shipping Weight		kg	119.0	83.5	120.0	120.0
		Net Dimensions (WxHxD)		mm	940 x 1,420 x 330	940 x 998 x 330	940 x 1,420 x 330	940 x 1,420 x 330
		Shipping Dimensions (WxHxD)		mm	995 x 1,598 x 426	995 x 1,178 x 426	995 x 1,598 x 426	995 x 1,598 x 426
	Operating Temp. Range	Heating		°C	-25~35	-25~35	-25~35	-25~35
		Cooling		°C	10~46	10~46	10~46	10~46
		D.Hot Water		°C	-25~43	-25~43	-25~43	-25~43

NOTE

- Specifications may be subject to change without prior notice.
  1)* A2W Condition #1 : (Heating) Water In/Out 30°C/35°C,
  Outdoor Air 7°C[DB]/6°C[WB]; (Cooling) Water In/Out 23°C/18°C, Outdoor Air 35°C[DB].
  2)* A2W Condition #2 : (Heating) Water In/Out 40°C/45°C,
  Outdoor Air 7°C[DB]/6°C[WB]; (Cooling) Water In/Out 12°C/7°C, Outdoor Air 35°C[DB].
  3)* A2W Condition #3 : (Heating) Water In/Out 47°C/55°C, Outdoor Air 7°C[DB]/6°C[WB].
  4)* A2W Condition : (A2W35) Water In/Out -/35°C,
  Outdoor Air 2°C[DB]/1°C[WB]; (A-7/W35) Water In/Out -/35°C, Outdoor Air -7°C[DB]/-(※ Peak Capacity)
- Select wire size based on the value of MCA
- Sound pressure level is obtained in an anechoic room.
  - Sound pressure level is a relative value, depending on the distance and acoustic environment.
  - Sound pressure level may differ depending on operation condition.
  - dBA = A-weighted sound pressure level
  - Reference acoustic pressure 0 dB = 20uPa
- Sound power level is an absolute value that a sound source generates.
  - dBA = A-weighted Sound power level
  - Reference power : 1pW
  - Measured according to ISO 3741
- These products contain R32 (GWP=675) which is fluorinated greenhouse gas.
- The system is operated in (-25°C ≤ Outdoor temp. < -20°C) condition, but no guarantee of capacity.
- The system is operated by only Booster Heater in special condition (35 °C < Outdoor temp. ≤ 43°C).

2. Outdoor Units

2-2. Electrical characteristics

Capacity [kW]	Model	Power Supply				Voltage Range [V]		Nominal Running Current [A]		Current [A]	
		Φ	#	Hz	Voltage	Min. (-10%)	Max. (+10%)	Cooling	Heating	MCA	MFA
5.0	AE050CXYDEK/EU	1	2	50	220-240	198	264	6.05	4.63	16.1	17.6
8.0	AE080CXYDEK/EU	1	2	50	220-240	198	264	9.69	7.70	26.0	28.6
12.0	AE120CXYDEK/EU	1	2	50	220-240	198	264	14.18	11.81	32.0	35.2
16.0	AE160CXYDEK/EU	1	2	50	220-240	198	264	17.39	16.78	32.0	35.2
8.0	AE080CXYDGK/EU	3	4	50	380-415	342	457	3.22	2.56	16.1	17.7
12.0	AE120CXYDGK/EU	3	4	50	380-415	342	457	4.71	3.92	16.1	17.7
16.0	AE160CXYDGK/EU	3	4	50	380-415	342	457	5.77	5.57	16.1	17.7
8.0	AE080BXYDEG/EU	1	2	50	220-240	198	264	7.56	8.04	26.0	28.6
12.0	AE120BXYDEG/EU	1	2	50	220-240	198	264	11.12	12.46	32.0	35.2
14.0	AE140BXYDEG/EU	1	2	50	220-240	198	264	13.10	14.87	32.0	35.2
8.0	AE080BXYDGG/EU	3	4	50	380-415	342	457	2.51	2.67	16.1	17.7
12.0	AE120BXYDGG/EU	3	4	50	380-415	342	457	3.69	4.14	16.1	17.7
14.0	AE140BXYDGG/EU	3	4	50	380-415	342	457	4.35	4.94	16.1	17.7
5.0	AE050RXYDEG/EU	1	2	50	220~240	198	264	5.4	4.9	16.0	20.0
8.0	AE080RXYDEG/EU	1	2	50	220~240	198	264	9.1	8.5	22.0	27.5
12.0	AE120RXYDEG/EU	1	2	50	220~240	198	264	13.2	12.2	28.0	35.0
16.0	AE160RXYDEG/EU	1	2	50	220~240	198	264	15.7	17.0	32.0	40.0
8.0	AE080RXYDGG/EU	3	4	50	380~415	342	456	3.0	2.8	16.1	17.7
12.0	AE120RXYDGG/EU	3	4	50	380~415	342	456	4.4	4.1	16.1	17.7
16.0	AE160RXYDGG/EU	3	4	50	380~415	342	456	5.3	5.7	16.1	17.7

NOTE

- MCA : Mimium circuit amperes
- MFA : Maximum fuse amperes
- Select wire size based on the value of MCA

2. Outdoor Units

2-3. Dimensional drawing

AE050CXYDEK/EU, 080CXYD*K/EU

Units : mm [inches]

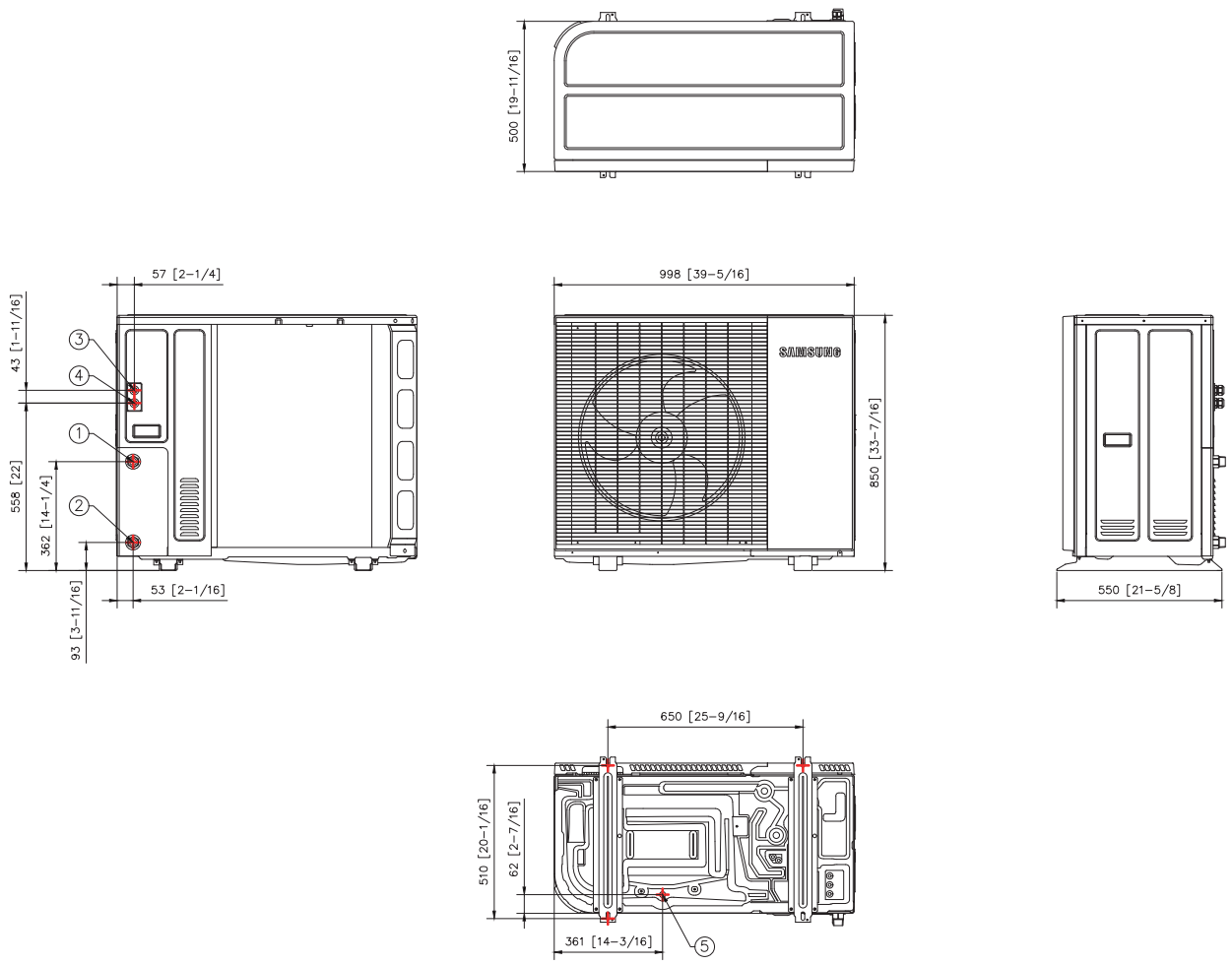

NO	Name	Description
1	Water Pipe(Out)	25A
2	Water Pipe(In)	25A
3	Power wiring conduit	M25x1.5 (Cable gland)
4	Communication wiring conduit	M25x1.5 (Cable gland)
5	Drain holes	∅20 (connect with the provided drain plug)

2. Outdoor Units

2-3. Dimensional drawing

AE120/160CXYD*K/EU

Units : mm [inches]

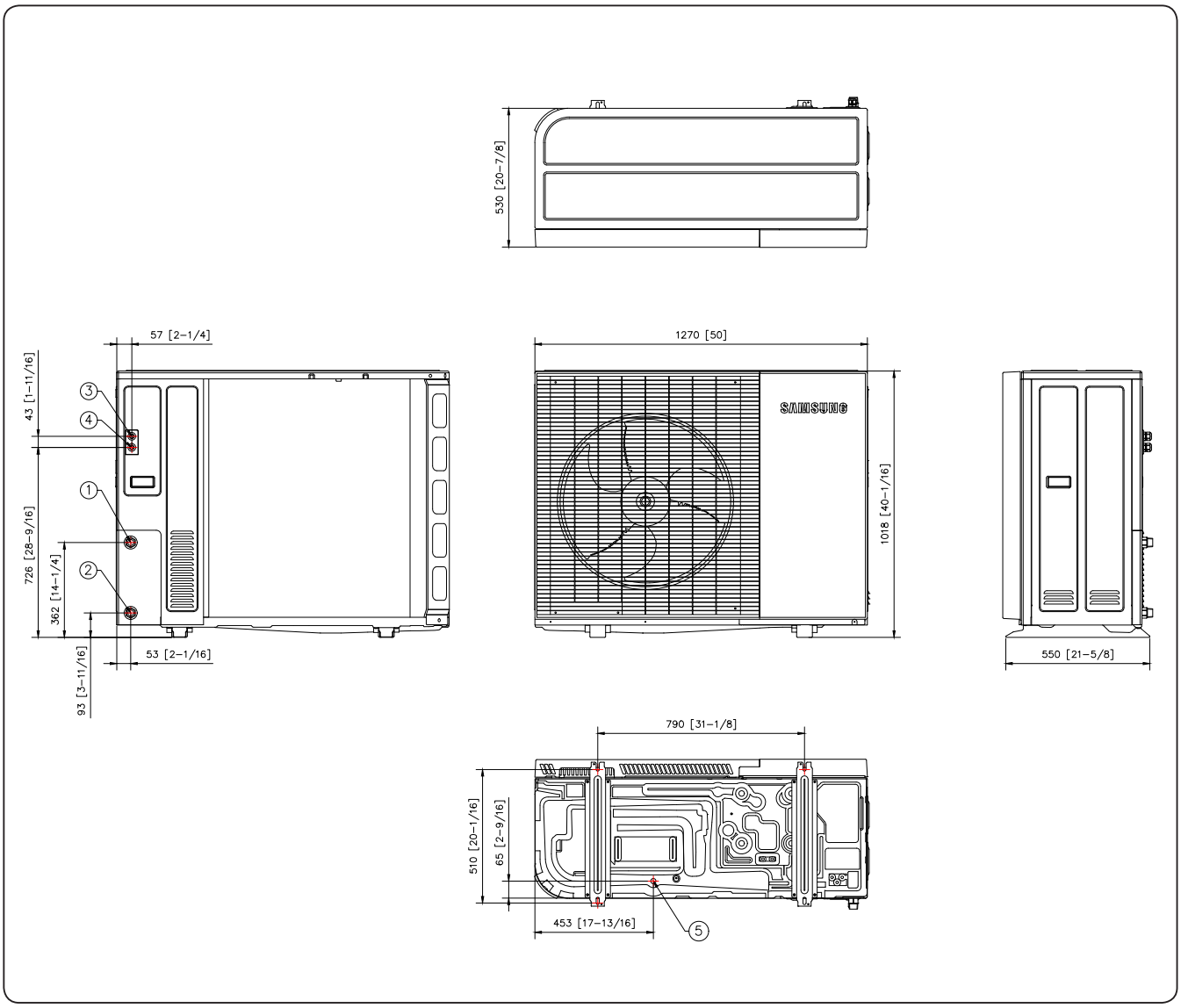

NO	Name	Description
1	Water Pipe(Out)	25A
2	Water Pipe(In)	25A
3	Power wiring conduit	M25x1.5 (Cable gland)
4	Communication wiring conduit	M25x1.5 (Cable gland)
5	Drain holes	∅20 (connect with the provided drain plug)

2. Outdoor Units

2-3. Dimensional drawing

AE080/120/140BXYD*G/EU

Units : mm [inches]

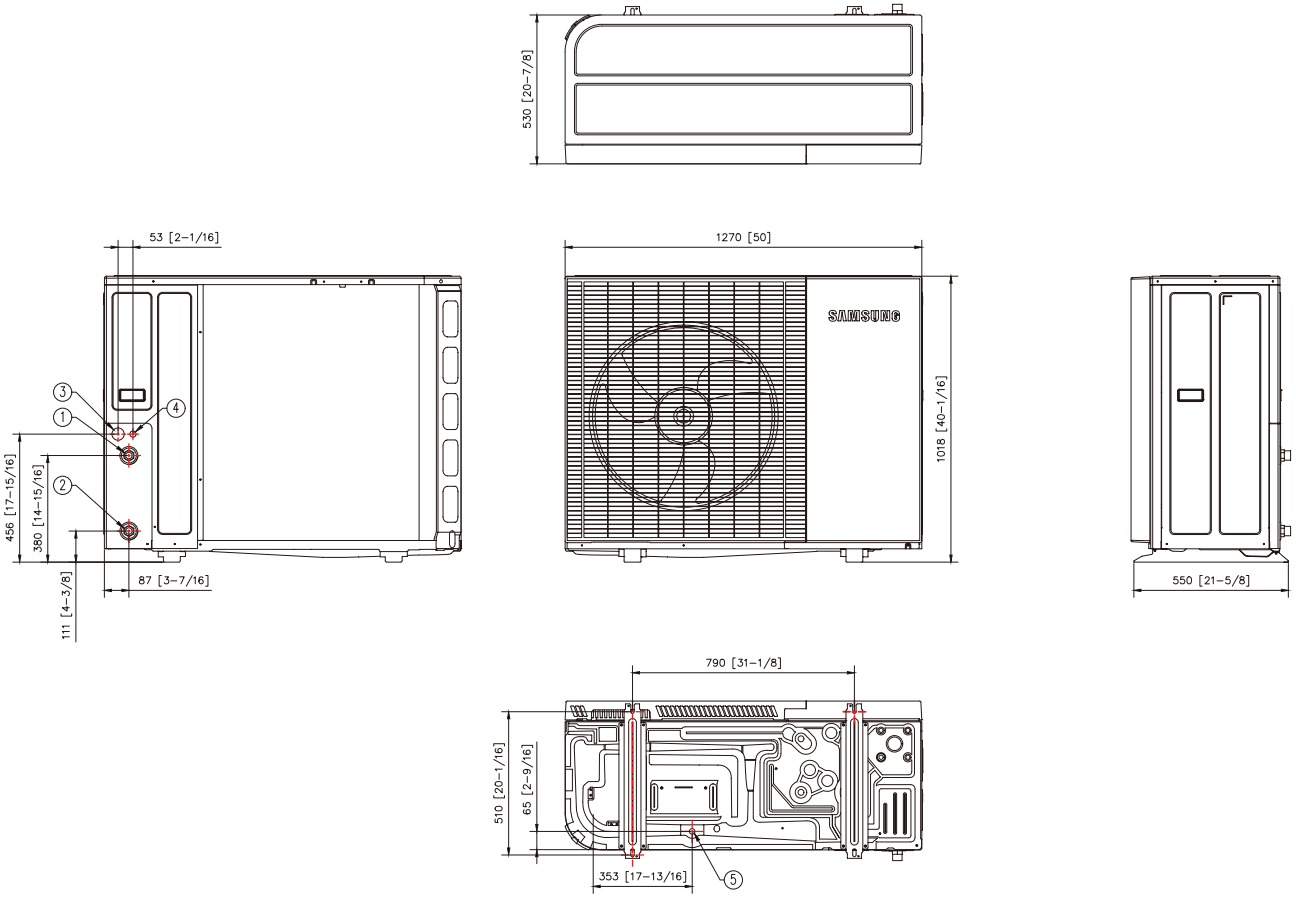

NO	Name	Descriotion
1	Water Pipe(Out)	Φ28
2	Water Pipe(In)	Φ28
3	Power wiring conduit	Φ44
4	communication wiring conduit	Φ22
5	Drain holes	connect with the provided drain plug

2. Outdoor Units

2-3. Dimensional drawing

AE050RXYDEG/EU

Units : mm [inches]

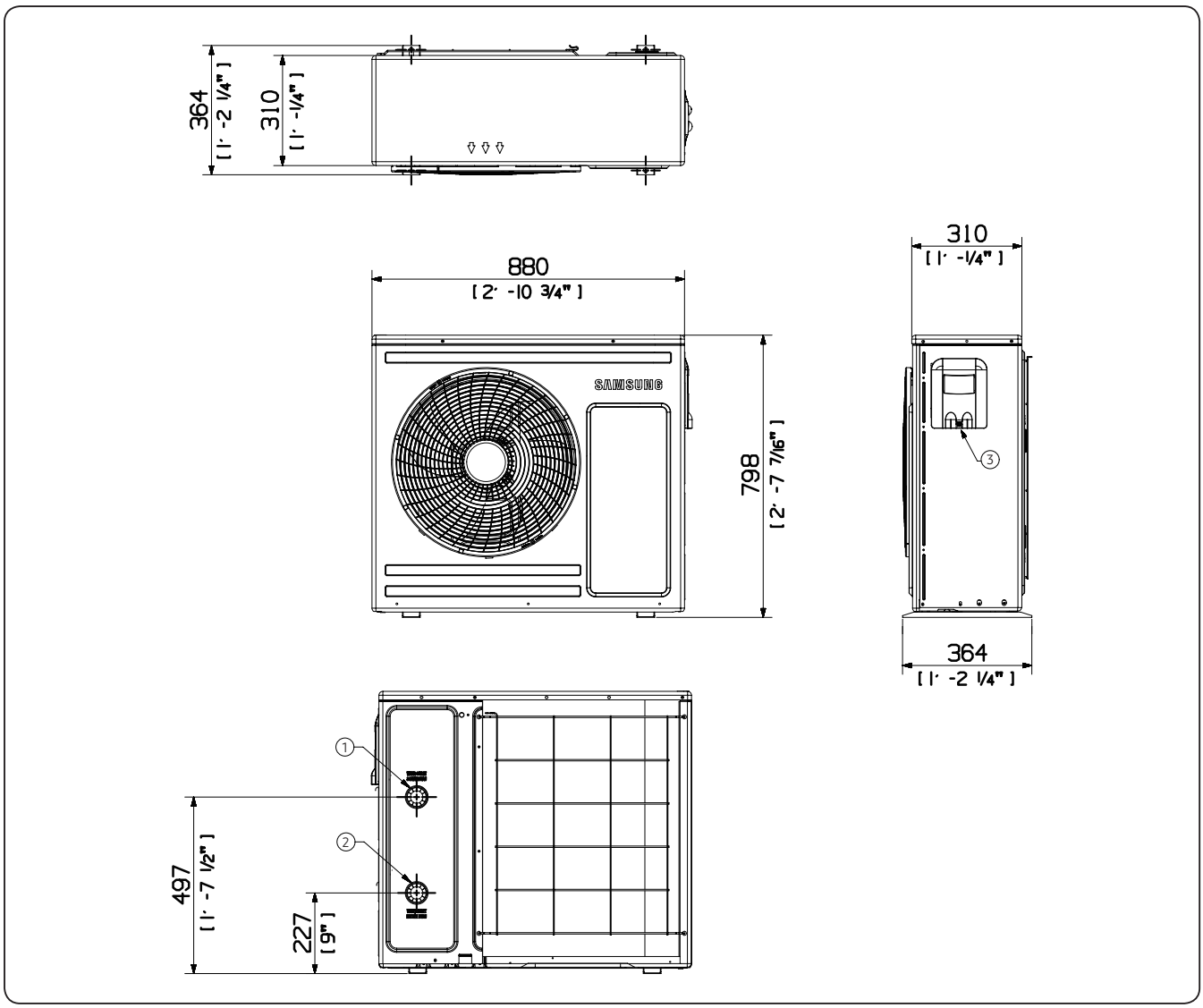

NO	Descriotion
1	Water Pipe(Out)
2	Water Pipe(In)
3	Power & Communication Wiring Conduit Holes

2. Outdoor Units

2-3. Dimensional drawing

AE080RXYD*G/EU

Units : mm [inches]

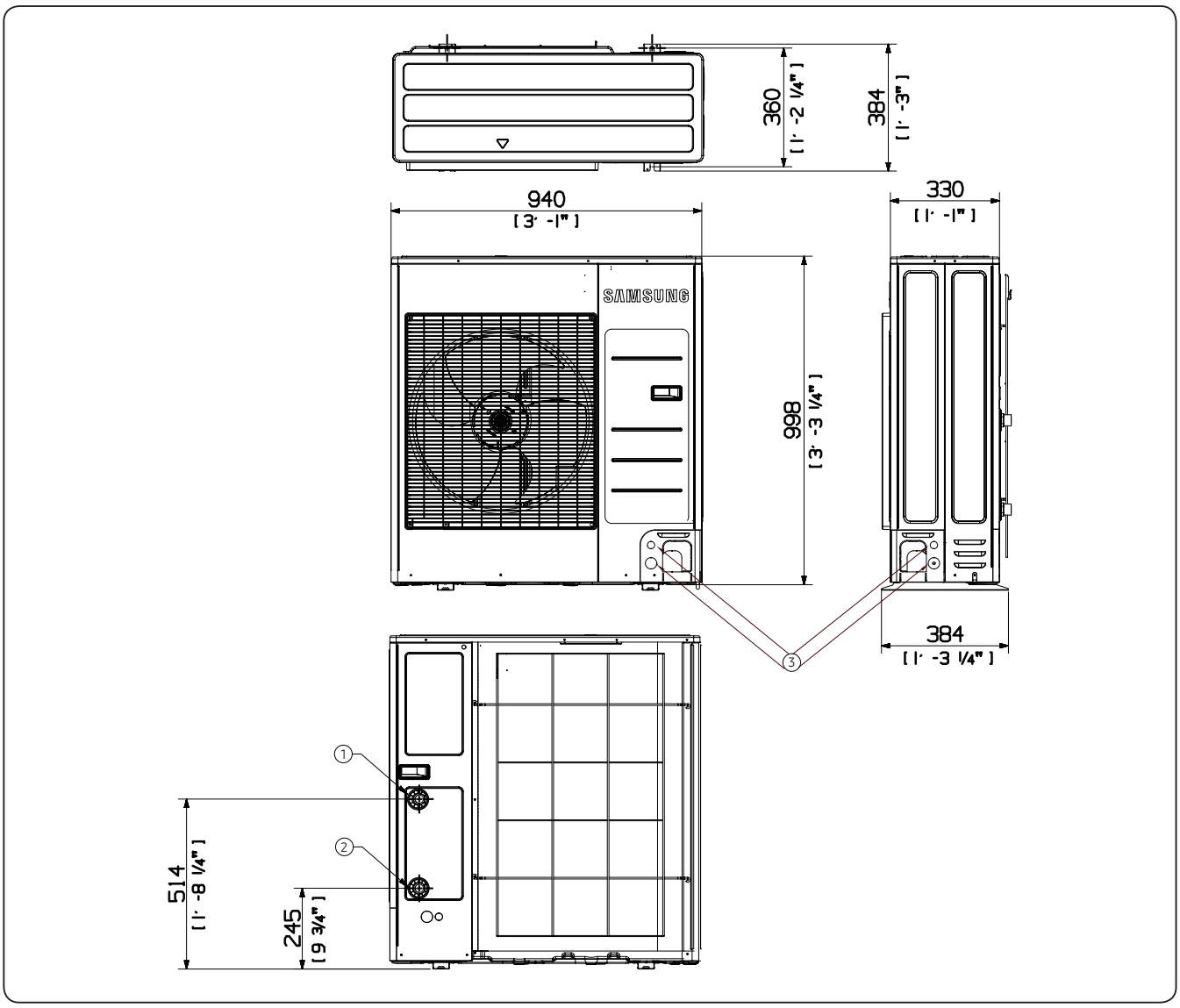

NO	Description
1	Water Pipe(Out)
2	Water Pipe(In)
3	Power & Communication Wiring Conduit Holes

2. Outdoor Units

2-3. Dimensional drawing

AE120/160RXYD*G/EU

Units : mm [inches]

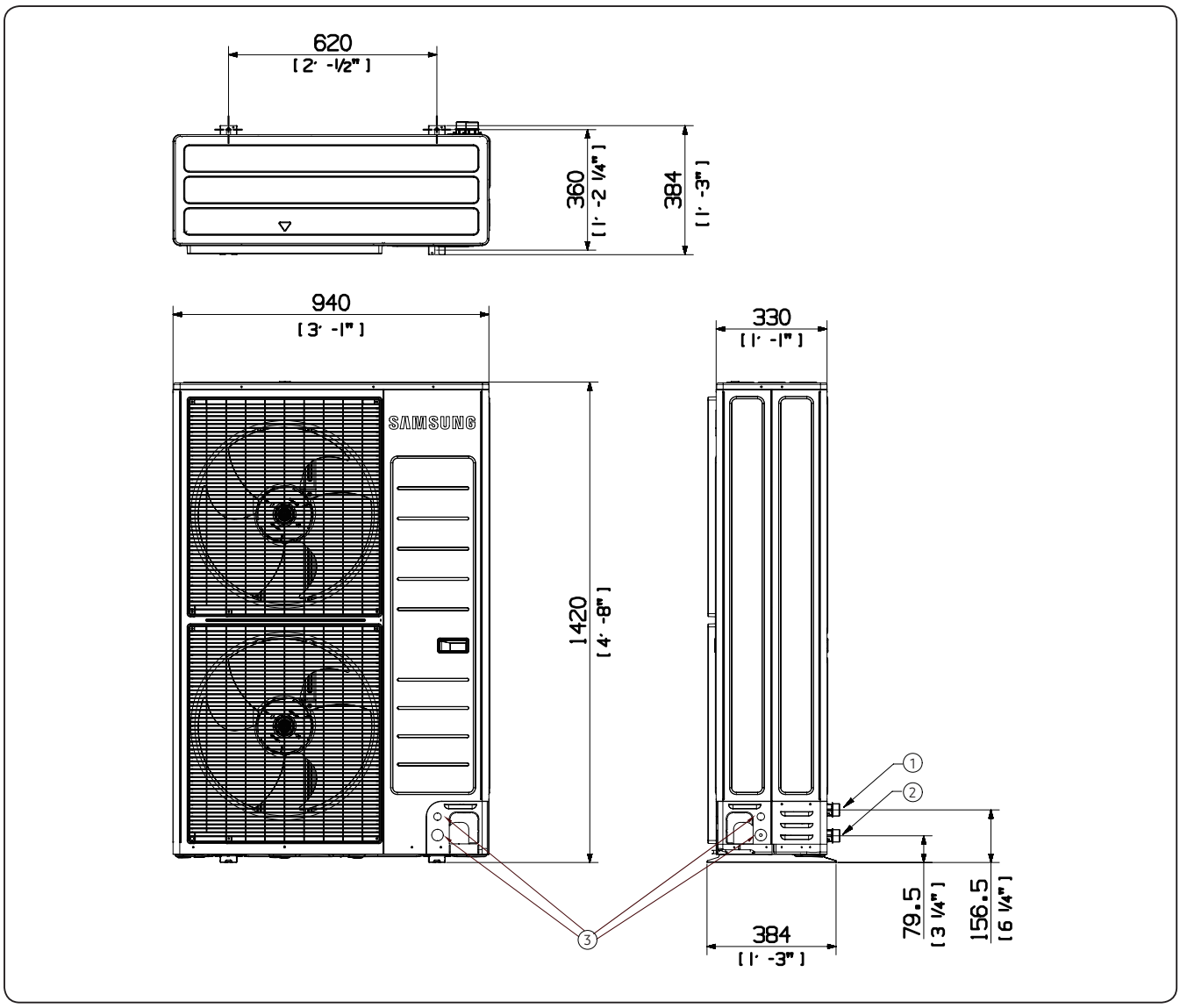

NO	Description
1	Water Pipe(Out)
2	Water Pipe(In)
3	Power & Communication Wiring Conduit Holes

2. Outdoor Units

2-4. Center of Gravity

AE050CXYDEK/EU, 080CXYD*K/EU

Units : mm [inches]

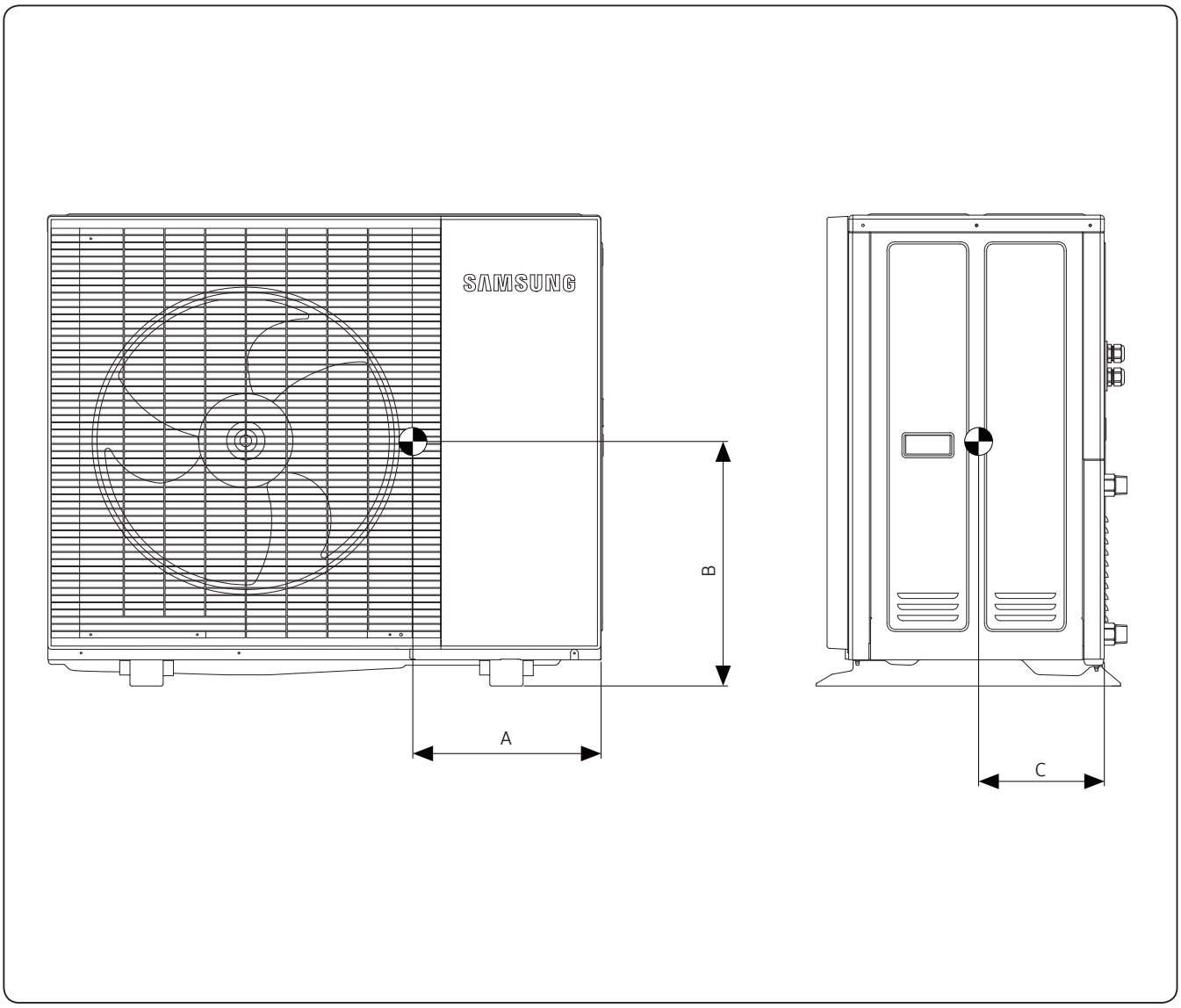

Model	A	B	C
AE050CXYDEK/EU AE080CXYDEK/EU AE080CXYDGK/EU	340 [13 3/8]	396 [15 9/16]	227 [8 15/16]

2. Outdoor Units

2-4. Center of Gravity

AE120/160CXYD*K/EU

Units : mm [inches]

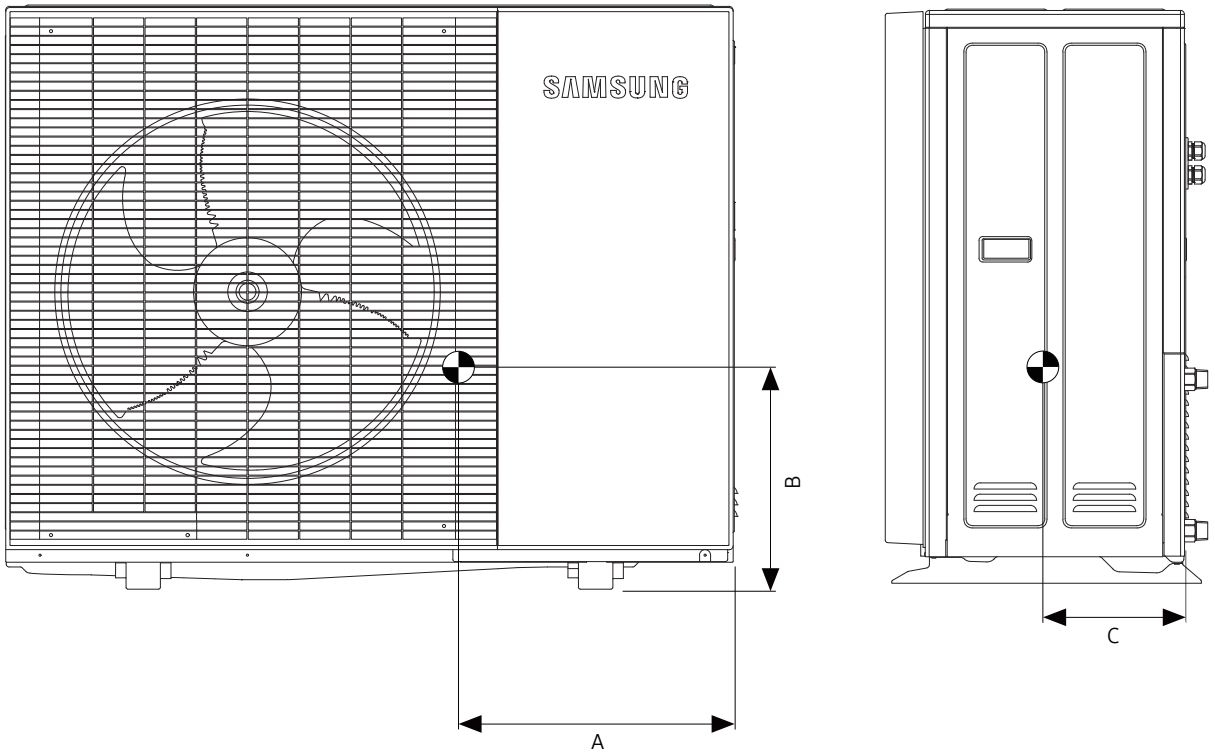

Model	A	B	C
AE120CXYD*K/EU AE160CXYD*K/EU	472 [18 9/16]	408 [16 1/16]	239 [9 7/16]

2. Outdoor Units

2-4. Center of Gravity

AE***BXYD*G/EU

Units : mm [inches]

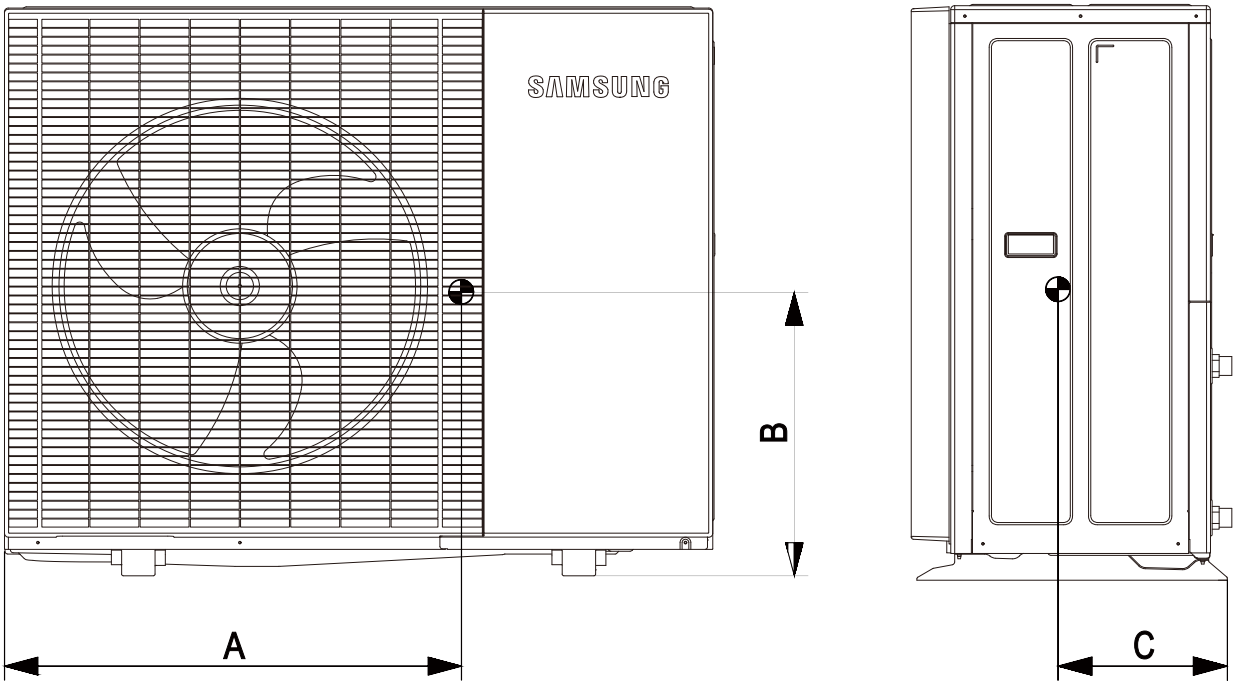

Model	A	B	C
AE***BXYD*G/EU	800 [31-1/2]	214 [8-7/16]	361 [14-3/16]

2. Outdoor Units

2-4. Center of Gravity

AE050RXYDEG/EU

Units : mm [inches]

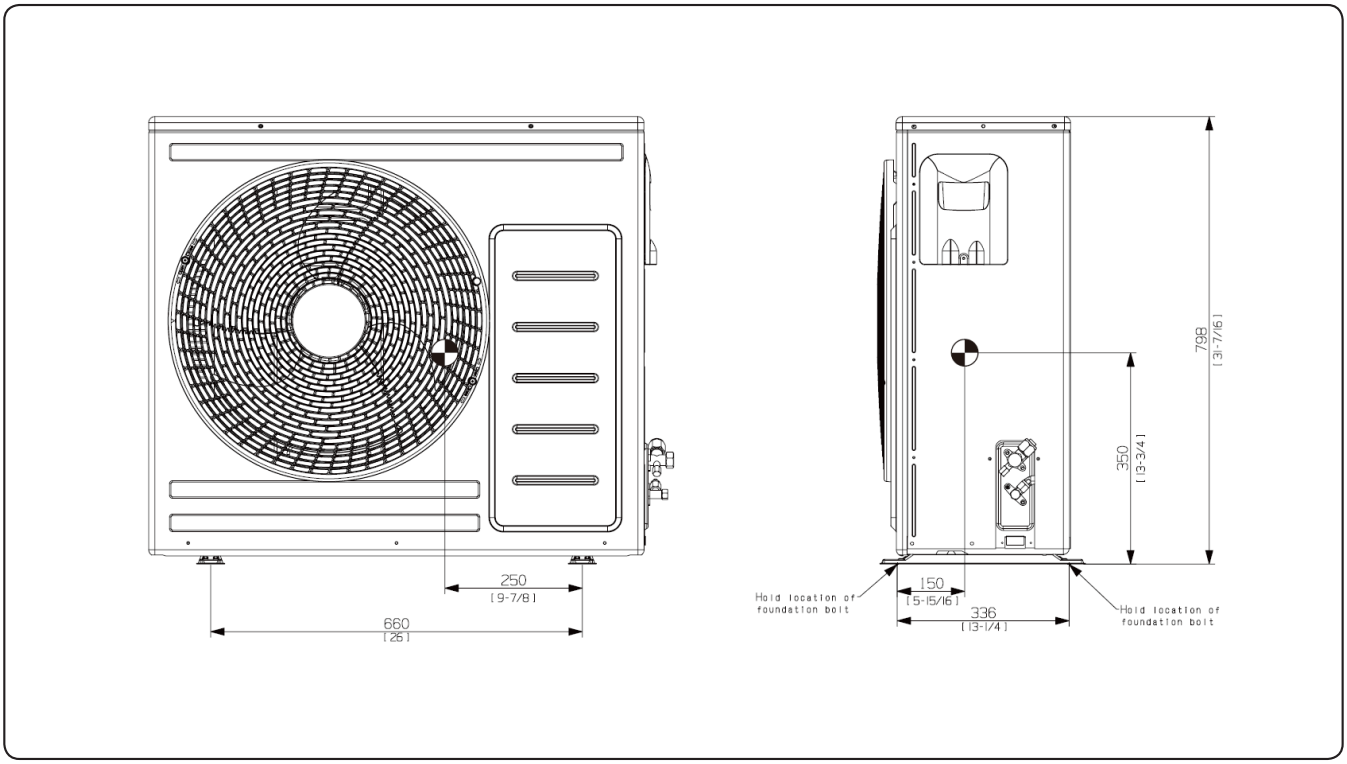

AE080RXYD*G/EU

Units : mm [inches]

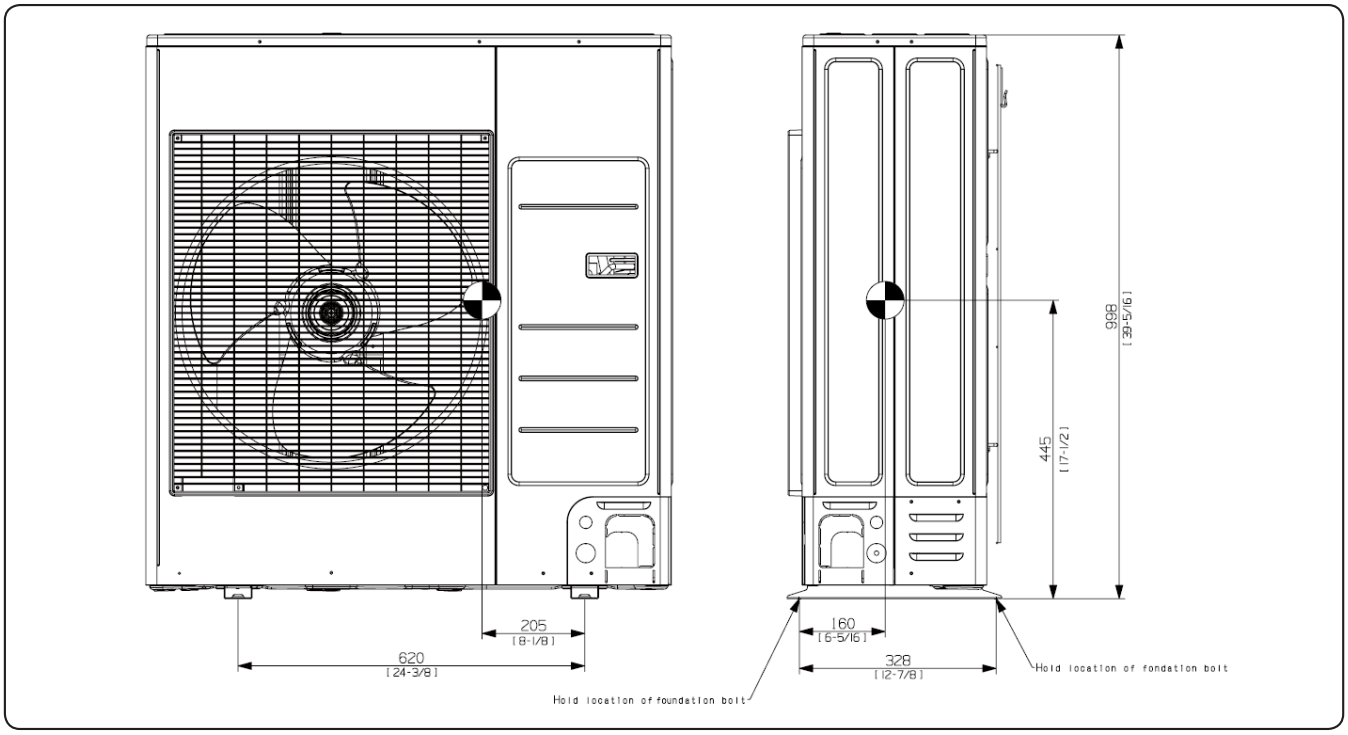

2. Outdoor Units

2-4. Center of Gravity

AE120/160RXYD*G/EU

Units : mm [inches]

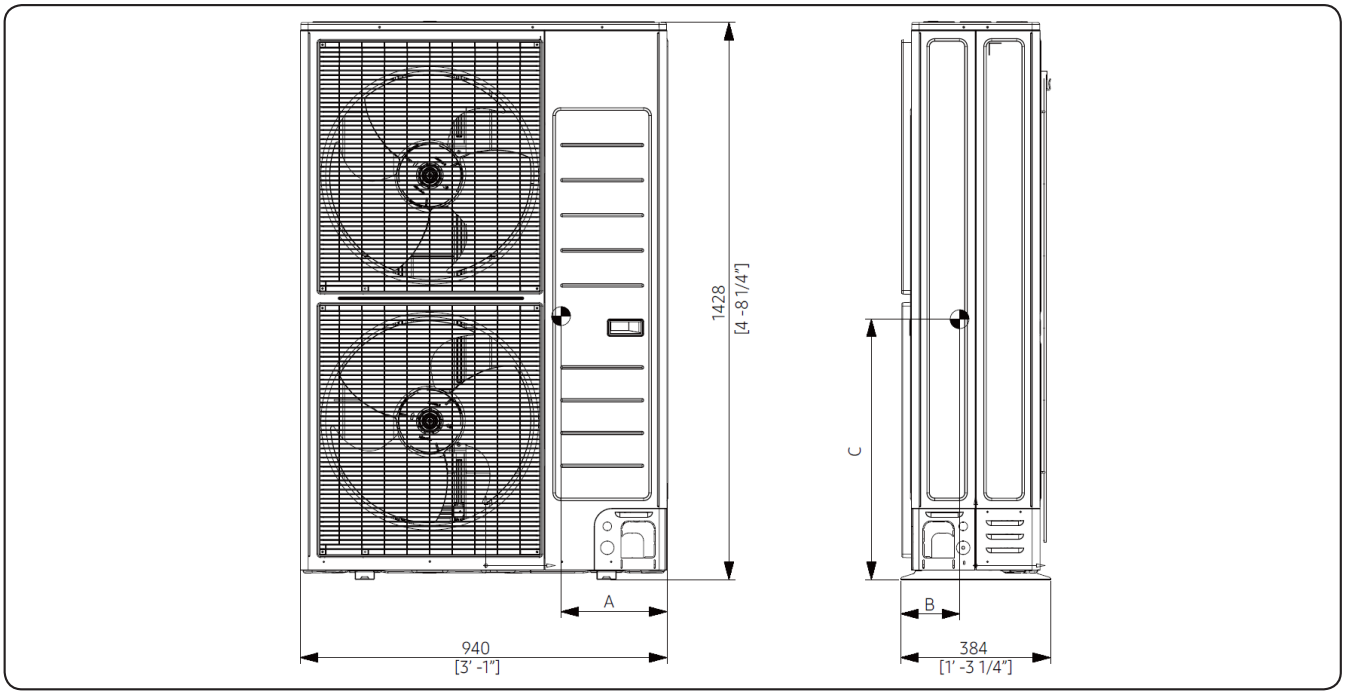

Model	A	B	C
AE120/160RXYD*G/EU	363 [14-5/16]	168 [6-5/8]	653 [25-11/16]

2. Outdoor Units

2-5. Electrical wiring diagram

AE050CXYDEK/EU, 080CXYD*K/EU

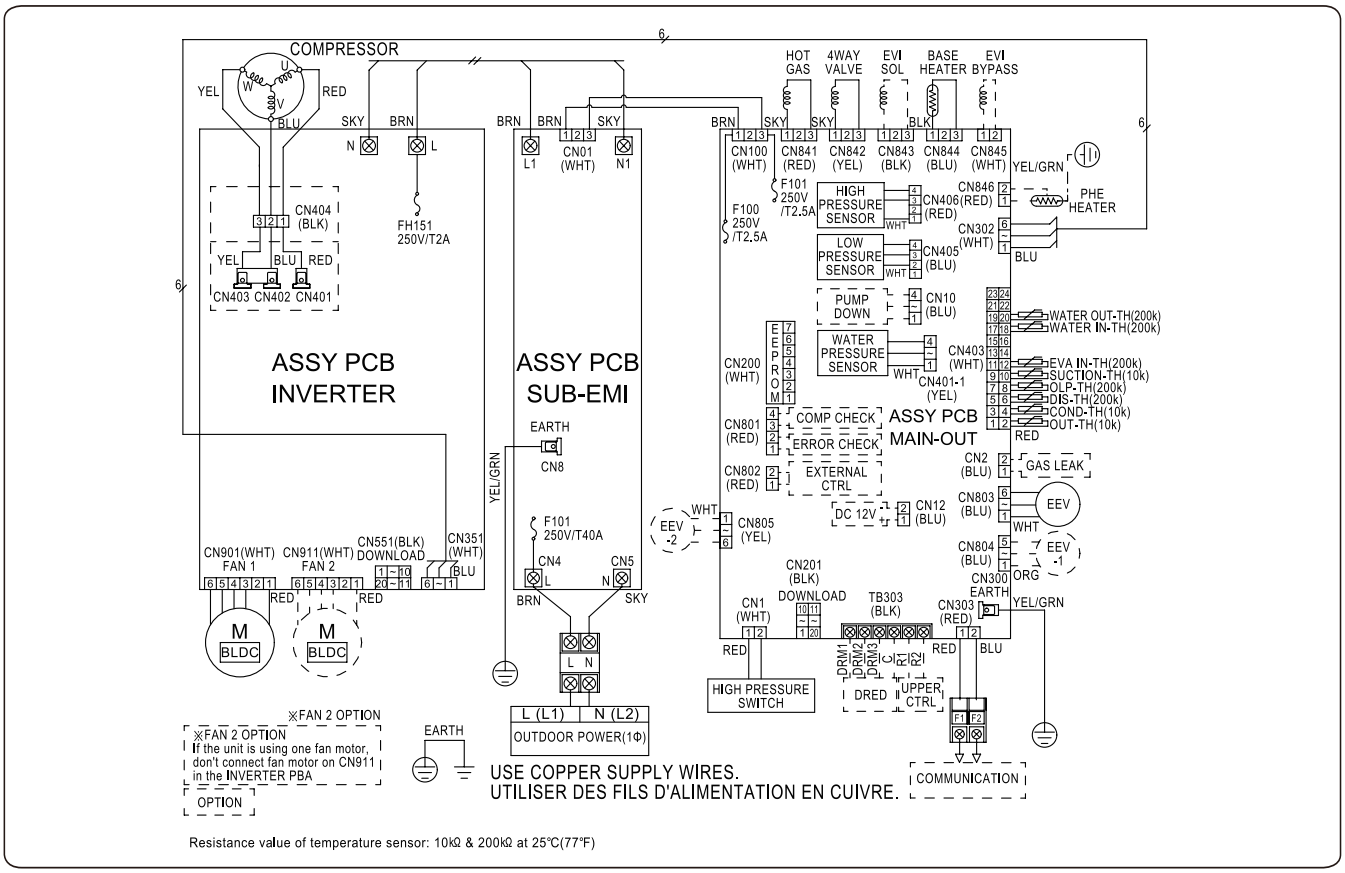

ASSY PCB MAIN-OUT	Printed circuit board(MAIN)	WATER OUT-TH(200k)	Thermistor (WATER OUT_200Kohm)
ASSY PCB INVER	Printed circuit board(INVERTER)	HOT GAS	Solenoid Valve - Hot Gas bypass
ASSY PCB SUB-EMI	Printed circuit board(EMI)	4WAY VALVE	Solenoid Valve - 4Way
OUT-TH(10k)	Thermistor (OUT_10Kohm)	EVI SOL	Solenoid Valve - EVI
COND-TH(10k)	Thermistor (COND_10Kohm)	EVI BYPASS	Solenoid Valve - EVI Bypass
DIS-TH(200k)	Thermistor (DISCHARGE_200Kohm)	M-BLDC	Motor for Outdoor Fan
OLP-TH(200k)	Thermistor (OLP_200Kohm)	EEV	Electronic Expansion Valve
SUCTION-TH(10k)	Thermistor (SUCTION_10kKohm)	EXTERNAL CTRL	External Control
EVA IN-TH(200k)	Thermistor (EVA IN_200Kohm)	UPPER CTRL	Upper Control
WATER IN-TH(200k)	Thermistor (WATER IN_200Kohm)		

NOTES

1. This wiring diagram applies only to the Outdoor unit.
2. Symbols show as follow :
   BLK: black, RED: red, BLU: blue, WHT: white, YEL: yellow, BRN: brown, SKY: skyblue, GRN: green
3. For connection wiring indoor-outdoor transmission F1-F2.
4. ⏚ Protective earth(SCREW)

2. Outdoor Units

2-5. Electrical wiring diagram

AE120/160CXYD*K/EU

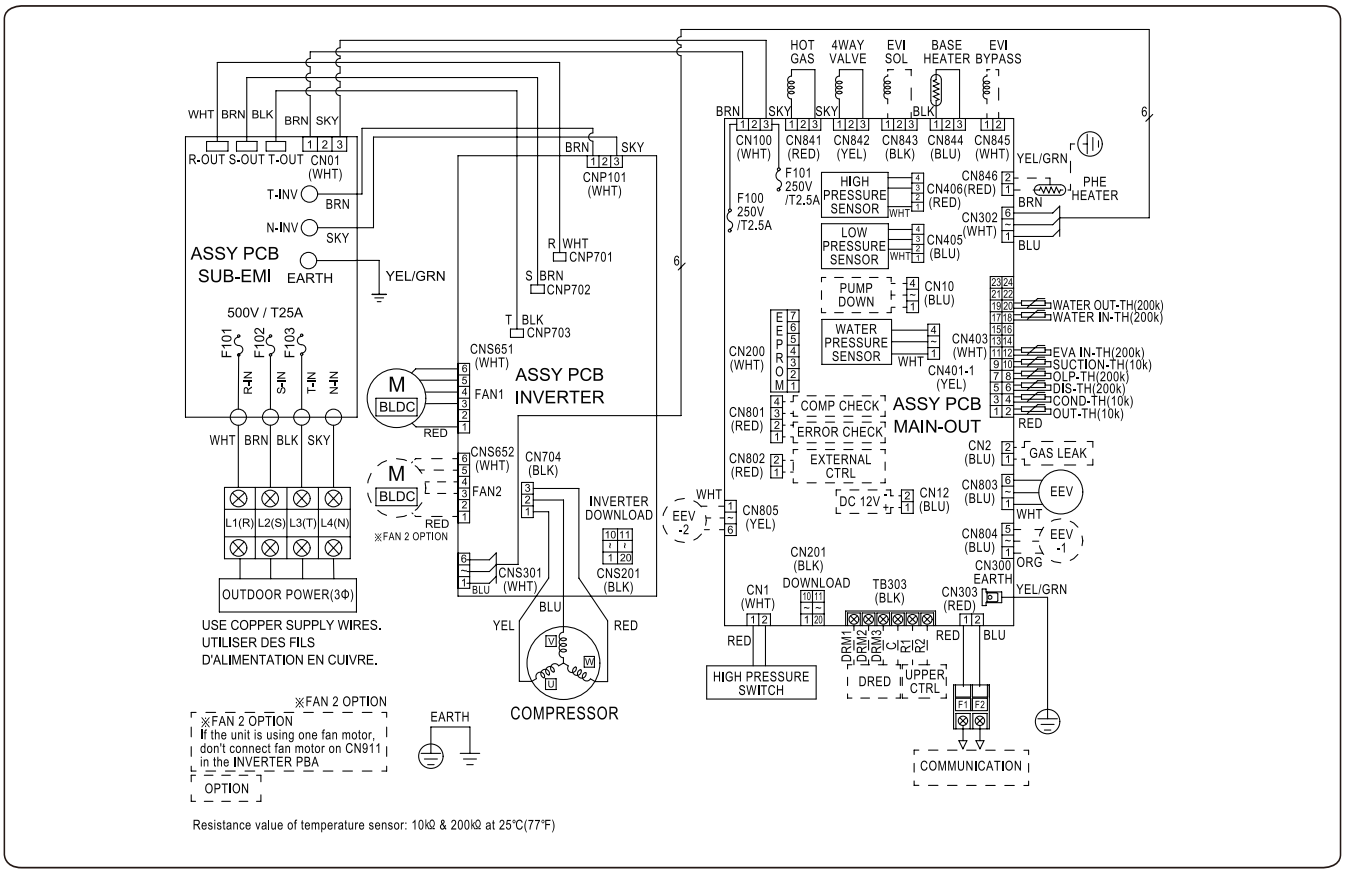

ASSY PCB MAIN-OUT	Printed circuit board(MAIN)	WATER OUT-TH(200k)	Thermistor (WATER OUT_200Kohm)
ASSY PCB INVER	Printed circuit board(INVERTER)	HOT GAS	Solenoid Valve - Hot Gas bypass
ASSY PCB SUB-EMI	Printed circuit board(EMI)	4WAY VALVE	Solenoid Valve - 4Way
OUT-TH(10k)	Thermistor (OUT_10Kohm)	EVI SOL	Solenoid Valve - EVI
COND-TH(10k)	Thermistor (COND_10Kohm)	EVI BYPASS	Solenoid Valve - EVI Bypass
DIS-TH(200k)	Thermistor (DISCHARGE_200Kohm)	M-BLDC	Motor for Outdoor Fan
OLP-TH(200k)	Thermistor (OLP_200Kohm)	EEV	Electronic Expansion Valve
SUCTION-TH(10k)	Thermistor (SUCTION_10kKohm)	EXTERNAL CTRL	External Control
EVA IN-TH(200k)	Thermistor (EVA IN_200Kohm)	UPPER CTRL	Upper Control
WATER IN-TH(200k)	Thermistor (WATER IN_200Kohm)		

NOTES

1. This wiring diagram applies only to the Outdoor unit.
2. Symbols show as follow :
   BLK: black, RED: red, BLU: blue, WHT: white, YEL: yellow, BRN: brown, SKY: skyblue, GRN: green
3. For connection wiring indoor-outdoor transmission F1-F2.
4. ⏚ Protective earth(SCREW)

2. Outdoor Units

2-5. Electrical wiring diagram

AE080/120/140BXYDEG/EU

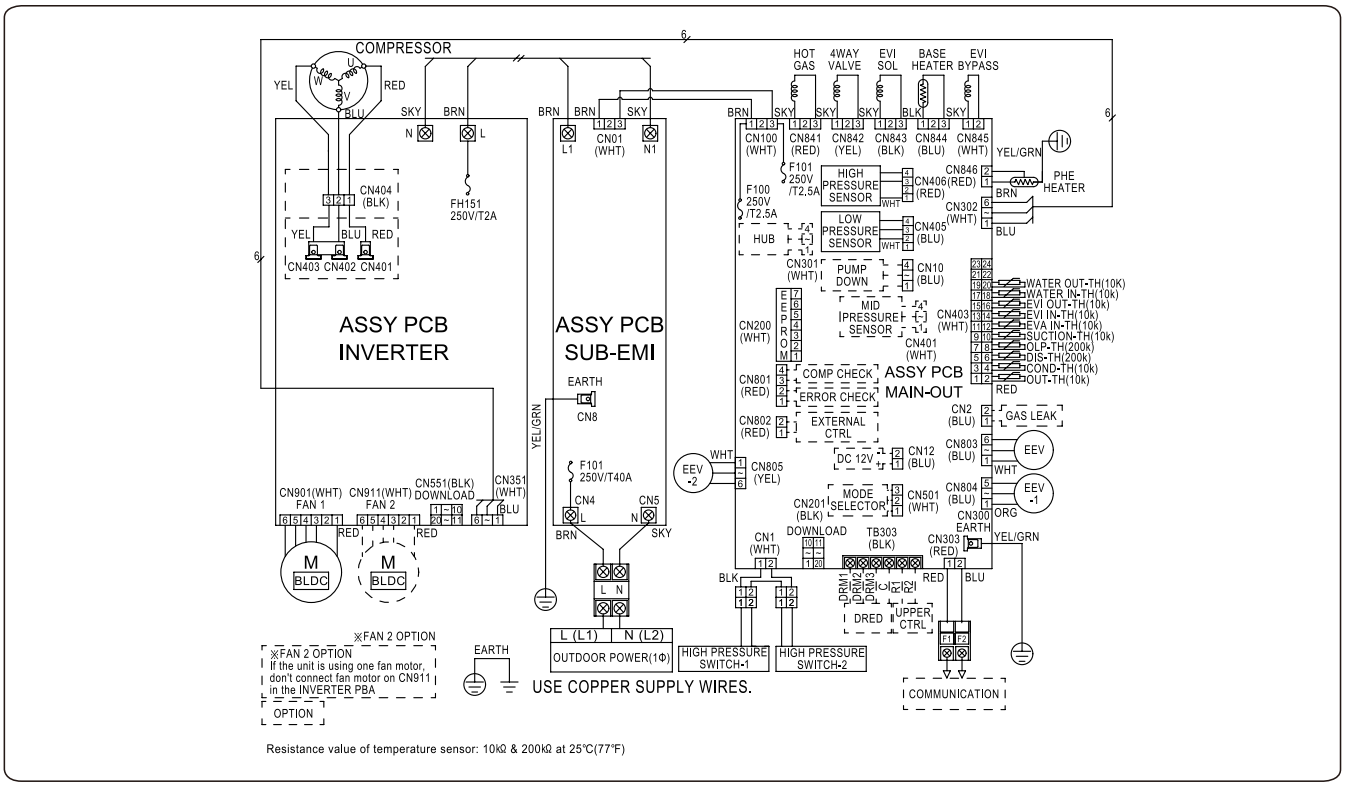

ASSY PCB MAIN-OUT	Printed circuit board(MAIN)	ASSY PCB INVERTER	Printed circuit board(INVERTER)	ASSY PCB SUB-EMI	Printed circuit board(EMI)
250V T40A	FUSE	250V T2.5A	FUSE	250V T2A	FUSE
M(BLDC)	Outdoor Fan	EEV	Electronic Expansion Valve - Main	EEV-1	Electronic Expansion Valve - EVI
EEV-2	Electronic Expansion Valve - Shut off	OUT-TH	Thermistor - Ambient	COND-TH	Thermistor - COND. Out
DIS-TH	Thermistor - Discharge pipe	OLP-TH	Thermistor - Compressor Top	SUCTION-TH	Thermistor - Suction pipe
EVA IN-TH	Thermistor - HEAT Exchanger In	EVI IN-TH	Thermistor - EVI In	EVI OUT-TH	Thermistor - EVI Out
WATER IN-TH	Thermistor - Water In	WATER OUT-TH	Thermistor - Water Out	4WAY VALVE	Solenoid valve - 4Way
EVI BYPASS	Solenoid valve - EVI Bypass	HOT GAS	Solenoid valve - Hot Gas Bypass	EVI SOL	Solenoid valve - Liquid Bypass

NOTES

1. This wiring diagram applies only to the Outdoor unit.
2. Symbols show as follow :
   BLK: black, RED: red, BLU: blue, WHT: white, YEL: yellow, BRN: brown, SKY: skyblue, GRN: green
3. For connection wiring indoor-outdoor transmission F1-F2.
4. ⏚ Protective earth(SCREW)

2. Outdoor Units

2-5. Electrical wiring diagram

AE080/120/140BXYDGG/EU

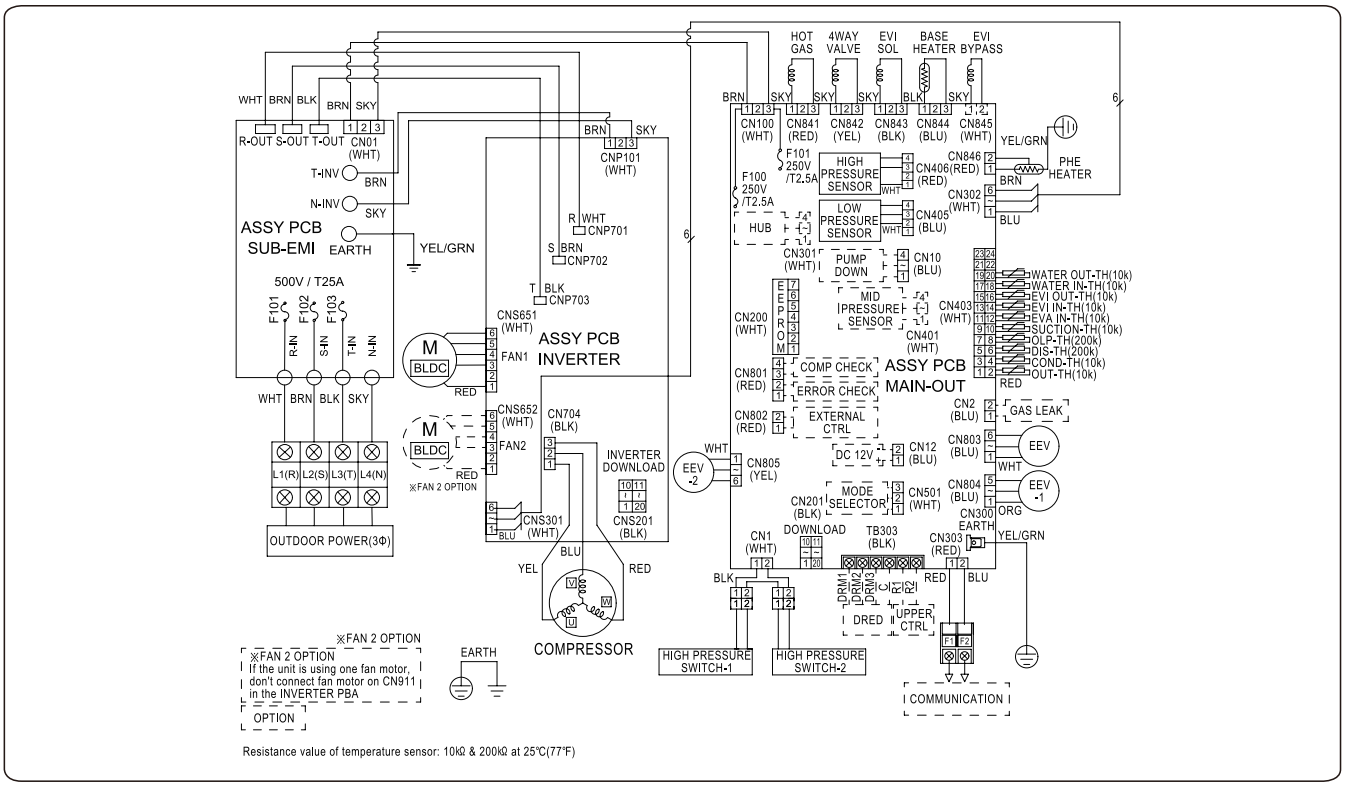

ASSY PCB MAIN-OUT	Printed circuit board(MAIN)	ASSY PCB INVERTER	Printed circuit board(INVERTER)	ASSY PCB SUB-EMI	Printed circuit board(EMI)
250V T40A	FUSE	250V T2.5A	FUSE		
M(BLDC)	Outdoor Fan	EEV	Electronic Expansion Valve - Main	EEV-1	Electronic Expansion Valve - EVI
EEV-2	Electronic Expansion Valve - Shut off	OUT-TH	Thermistor - Ambient	COND-TH	Thermistor - COND. Out
DIS-TH	Thermistor - Discharge pipe	OLP-TH	Thermistor - Compressor Top	SUCTION-TH	Thermistor - Suction pipe
EVA IN-TH	Thermistor - HEAT Exchanger In	EVI IN-TH	Thermistor - EVI In	EVI OUT-TH	Thermistor - EVI Out
WATER IN-TH	Thermistor - Water In	WATER OUT-TH	Thermistor - Water Out	4WAY VALVE	Solenoid valve - 4Way
EVI BYPASS	Solenoid valve - EVI Bypass	HOT GAS	Solenoid valve - Hot Gas Bypass	EVI SOL	Solenoid valve - Liquid Bypass

NOTES

1. This wiring diagram applies only to the Outdoor unit.
2. Symbols show as follow :
   BLK: black, RED: red, BLU: blue, WHT: white, YEL: yellow, BRN: brown, SKY: skyblue, GRN: green
3. For connection wiring indoor-outdoor transmission F1-F2.
4. ⏚ Protective earth(SCREW)

2. Outdoor Units

2-5. Electrical wiring diagram

AE050RXYDEG/EU

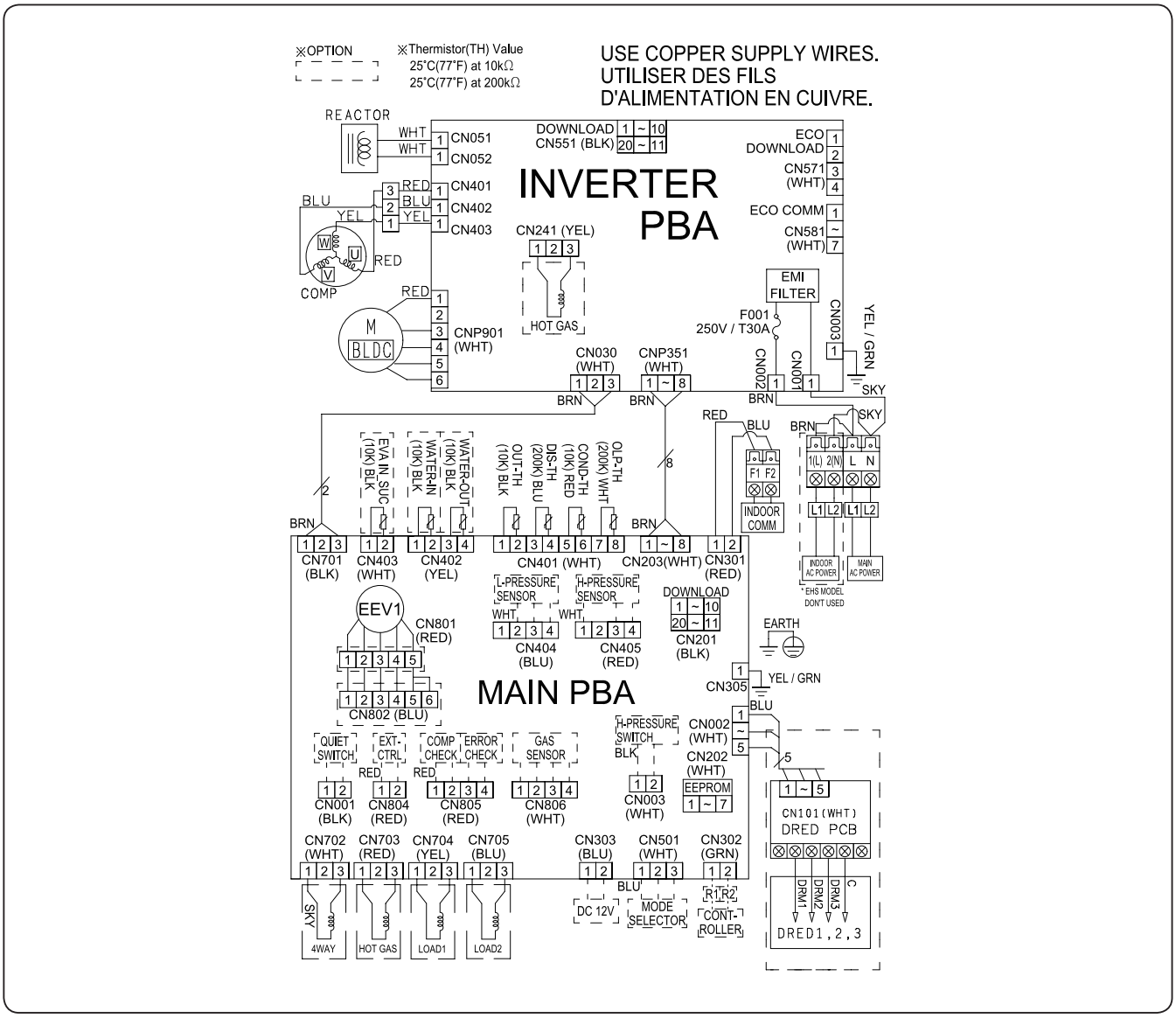

M BLDC	BLDC FAN MOTOR	COMP	COMPRESSOR
OUT-TH	Thermistor OUT(10K)	DIS-TH	Thermistor DISCHARGE(200K)
COND-TH	Thermistor COND(10K)	OLP-TH	Thermistor OLP(200K)

NOTES

1. This wiring diagram applies only to the Outdoor unit.
2. Symbols show as follow :
   blk: black, red: red, blu: blue, wht: white, yel: yellow, brn: brown, sky: skyblue, grn: green
3. For connection wiring indoor-outdoor transmission F1-F2, indoor-wired remote controller transmission F3-F4.
4. ⏚ Protective earth(SCREW)

2. Outdoor Units

2-5. Electrical wiring diagram

AE080/120/160RXYDEG/EU

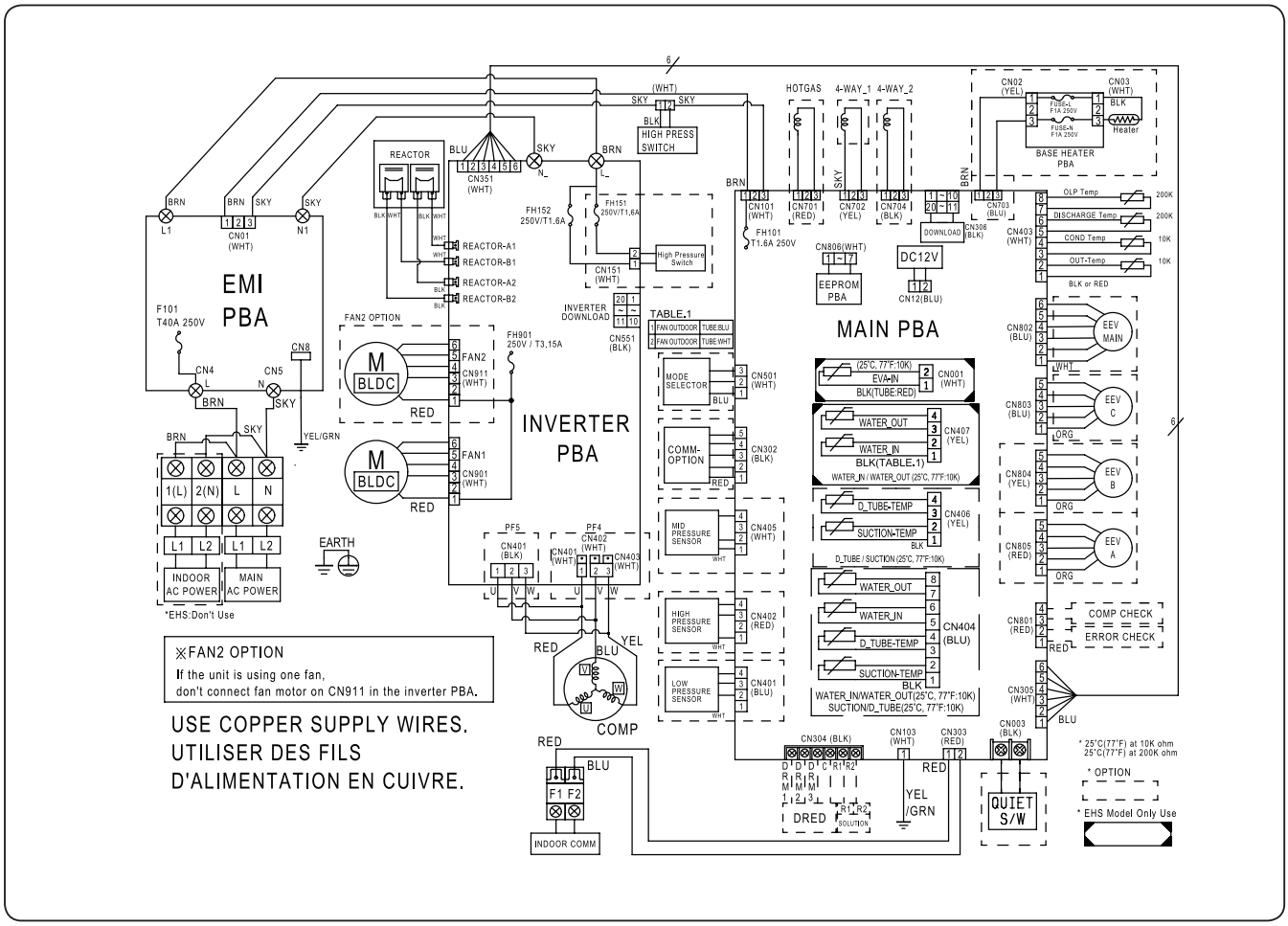

M BLDC	BLDC FAN MOTOR	COMP	COMPRESSOR
Comm	Communication	OUT-Temp	Thermistor OUT(10K)
COND-Temp	Thermistor COND(10K)	DISCHARGE-Temp	Thermistor DISCHARGE(200K)
OLP-Temp	Thermistor OLP(200K)	SUCTION-TEMP	Thermistor SUCTION(10K)

NOTES

1. This wiring diagram applies only to the Outdoor unit.
2. Symbols show as follow :
   blk: black, red: red, blu: blue, wht: white, yel: yellow, brn: brown, sky: skyblue, grn: green
3. For connection wiring indoor-outdoor transmission F1-F2, indoor-wired remote controller transmission F3-F4.
4. ⏚ Protective earth(SCREW)

2. Outdoor Units

2-5. Electrical wiring diagram

AE080/120/160RXYDGG/EU

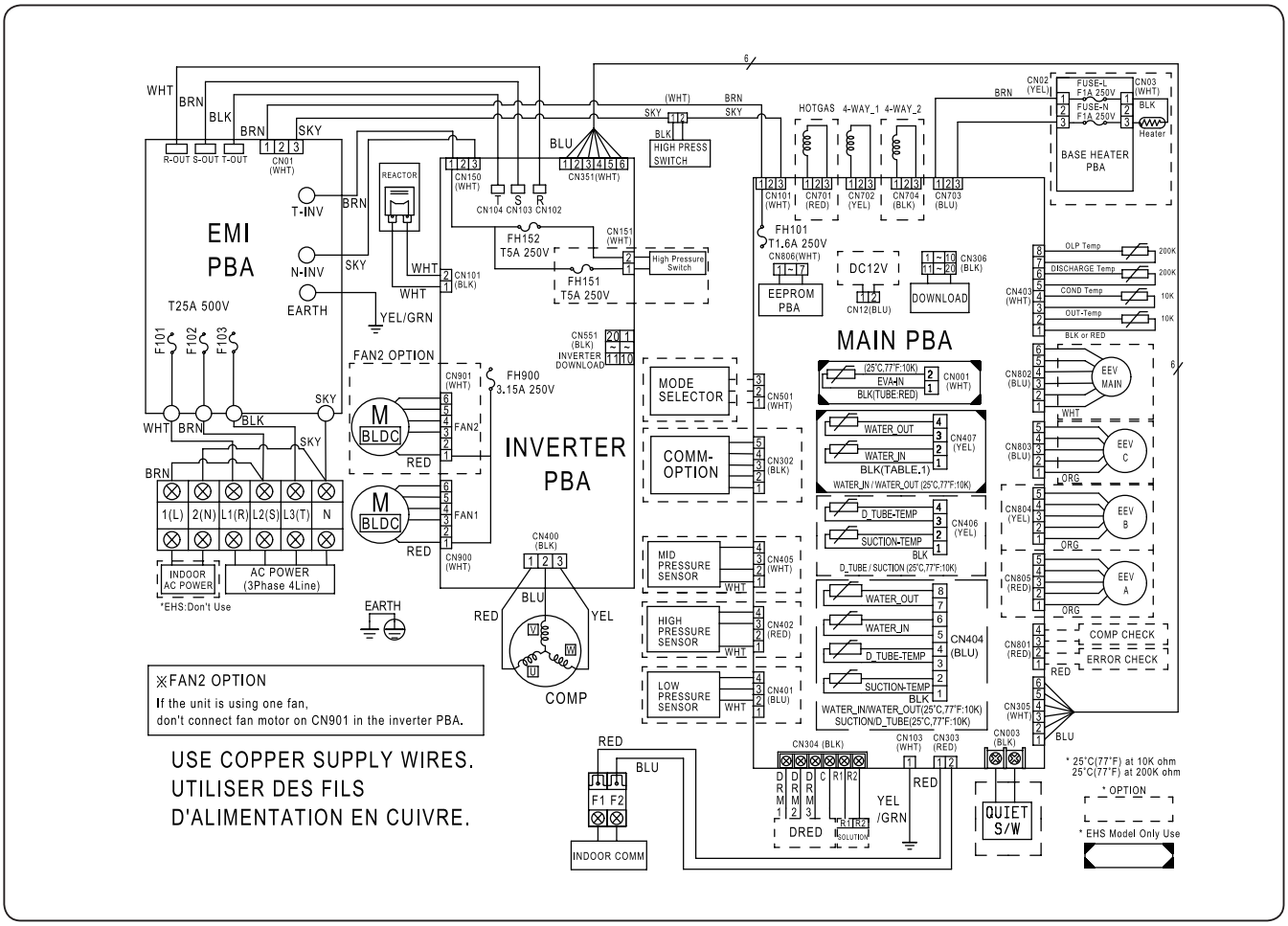

M BLDC	BLDC FAN MOTOR	COMP	COMPRESSOR
Comm	Communication	OUT-Temp	Thermistor OUT(10K)
COND-Temp	Thermistor COND(10K)	DISCHARGE-Temp	Thermistor DISCHARGE(200K)
OLP-Temp	Thermistor OLP(200K)	SUCTION-TEMP	Thermistor SUCTION(10K)

NOTES

1. This wiring diagram applies only to the Outdoor unit.
2. Symbols show as follow :
   blk: black, red: red, blu: blue, wht: white, yel: yellow, brn: brown, sky: skyblue, grn: green
3. For connection wiring indoor-outdoor transmission F1-F2, indoor-wired remote controller transmission F3-F4.
4. ⏚ Protective earth(SCREW)

2. Outdoor Units

2-6. Sound data

Summary

Capacity (kW)	Model	Sound Pressure dB(A)		Sound Power dB(A)	
		Heating	Cooling	Heating	Cooling
5.0	AE050CXYDEK/EU	41	41	55	55
8.0	AE080CXYDEK/EU	45	45	59	59
12.0	AE120CXYDEK/EU	47	47	60	60
16.0	AE160CXYDEK/EU	51	51	65	65
8.0	AE080CXYDGK/EU	45	45	59	59
12.0	AE120CXYDGK/EU	47	47	60	60
16.0	AE160CXYDGK/EU	51	51	65	65
8.0	AE080BXYDEG/EU	42	42	56	56
12.0	AE120BXYDEG/EU	46	46	59	59
14.0	AE140BXYDEG/EU	47	47	60	60
8.0	AE080BXYDGG/EU	42	42	56	56
12.0	AE120BXYDGG/EU	46	46	59	59
14.0	AE140BXYDGG/EU	47	47	60	60
5.0	AE050RXYDEG/EU	45	45	61	62
8.0	AE080RXYDEG/EU	48	48	63	64
12.0	AE120RXYDEG/EU	50	50	64	65
16.0	AE160RXYDEG/EU	52	54	66	68
8.0	AE080RXYDGG/EU	48	48	63	64
12.0	AE120RXYDGG/EU	50	50	64	65
16.0	AE160RXYDGG/EU	52	54	66	68

NOTE

- Specifications may be subject to change without prior notice.
- Sound Pressure Level
  - Sound pressure level is obtained in an anechoic room.
  - Sound pressure level is a relative value, depending on the distance and acoustic environment.
  - Sound pressure level may differ depending on operation condition.
  - dBA = A-weighted sound pressure level
  - Reference acoustic pressure 0 dB = 20μPa
- Sound Power Level
  - Sound power level is an absolute value that a sound source generates.
  - dBA = A-weighted sound power level.
  - Reference power : 1pW.
  - Measured according to ISO 3741.

2. Outdoor Units

2-6. Sound data

Sound Pressure level

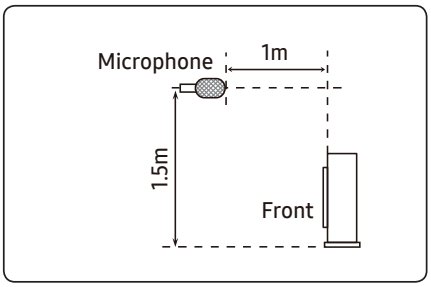

Unit: dB(A)

Model	Heating	Cooling
AE050CXYDEK/EU	41	41
AE080CXYDEK/EU	45	45
AE120CXYDEK/EU	47	47
AE160CXYDEK/EU	51	51

- NR Curve

1) AE050CXYDEK/EU

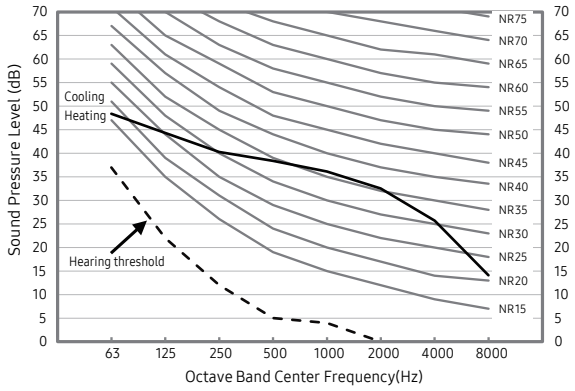

2) AE080CXYDEK/EU

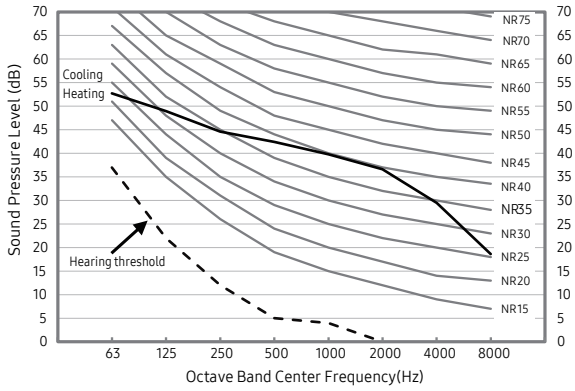

3) AE120CXYDEK/EU

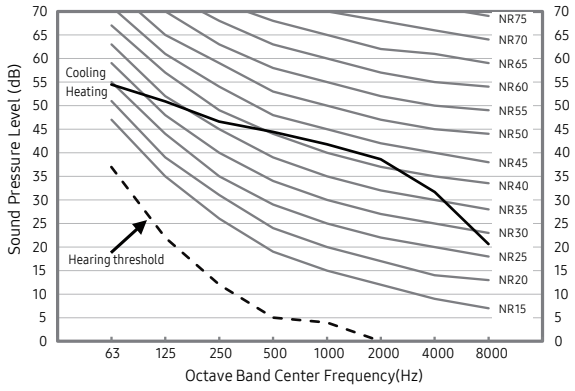

4) AE160CXYDEK/EU

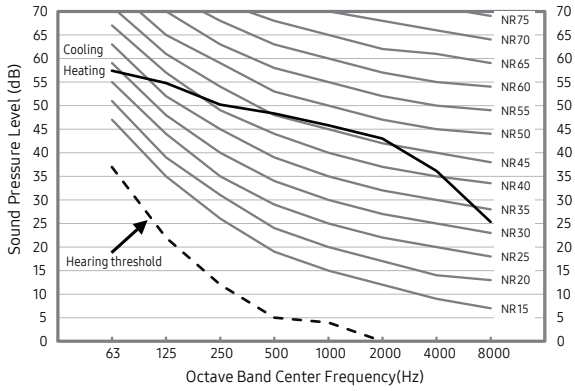

2. Outdoor Units

2-6. Sound data

Sound Pressure level

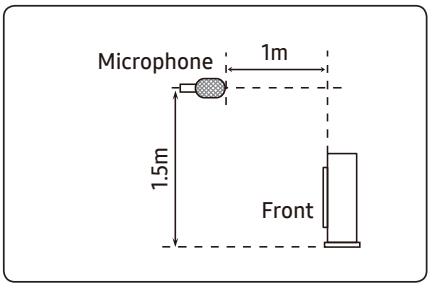

Unit: dB(A)

Model	Heating	Cooling
AE080CXYDGK/EU	45	45
AE120CXYDGK/EU	47	47
AE160CXYDGK/EU	51	51

- NR Curve

5) AE080CXYDGK/EU

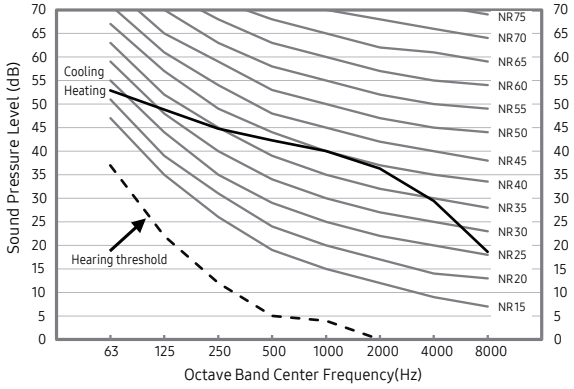

6) AE120CXYDGK/EU

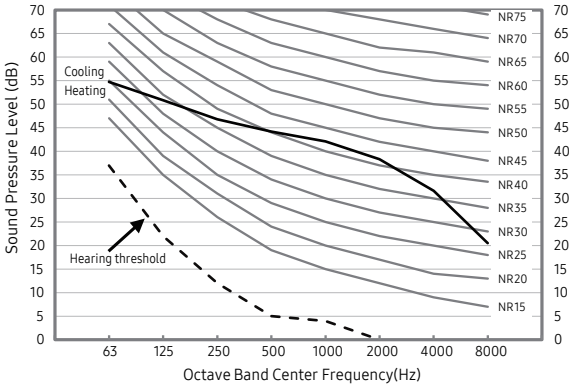

7) AE160CXYDGK/EU

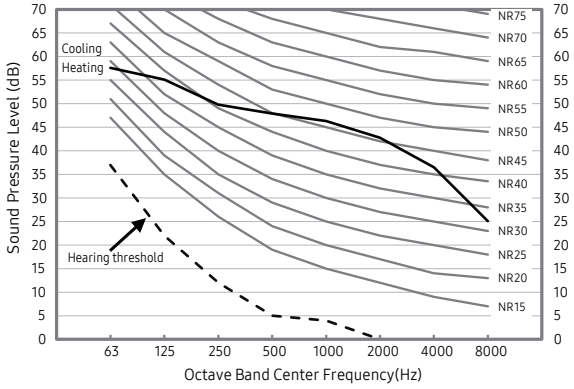

2. Outdoor Units

2-6. Sound data

Sound Pressure level

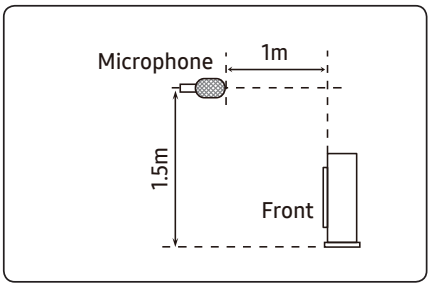

Unit: dB(A)

Model	Cooling	Heating
AE080BXYDEG/EU	42	42
AE120BXYDEG/EU	46	46
AE140BXYDEG/EU	47	47

- NR Curve

1) AE080BXYDEG/EU

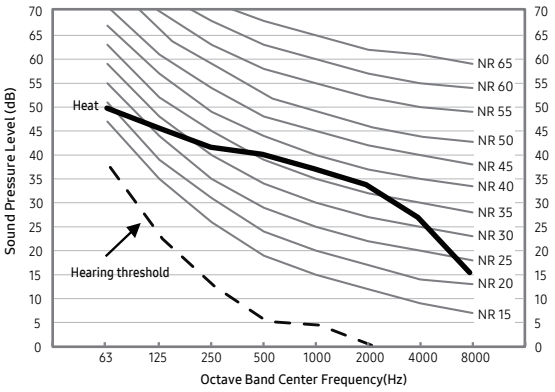

2) AE120BXYDEG/EU

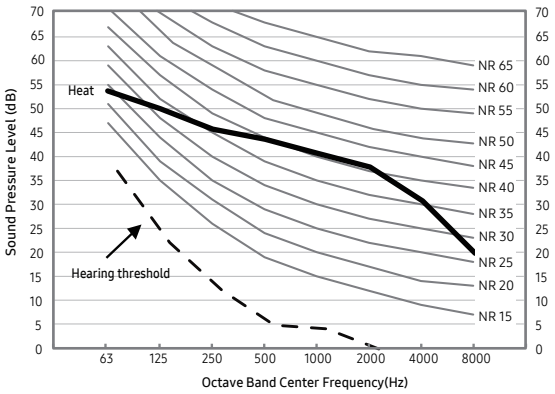

3) AE140BXYDEG/EU

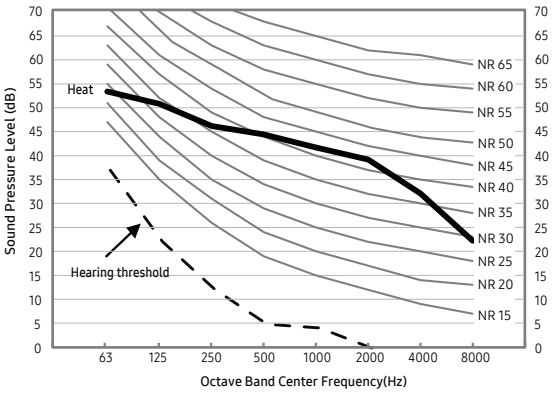

2. Outdoor Units

2-6. Sound data

Sound Pressure level

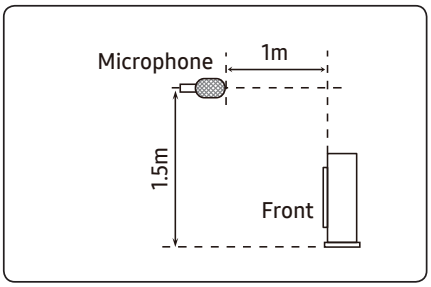

Unit: dB(A)

Model	Cooling	Heating
AE080BXYDGG/EU	42	42
AE120BXYDGG/EU	46	46
AE140BXYDGG/EU	47	47

- NR Curve

4) AE080BXYDGG/EU

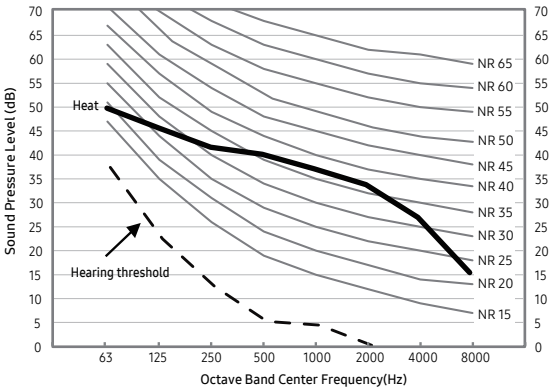

5) AE120BXYDGG/EU

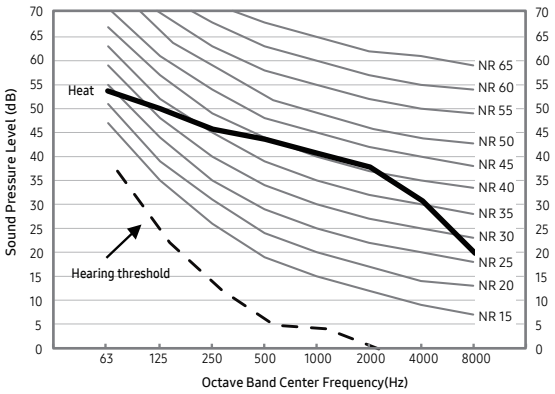

6) AE140BXYDGG/EU

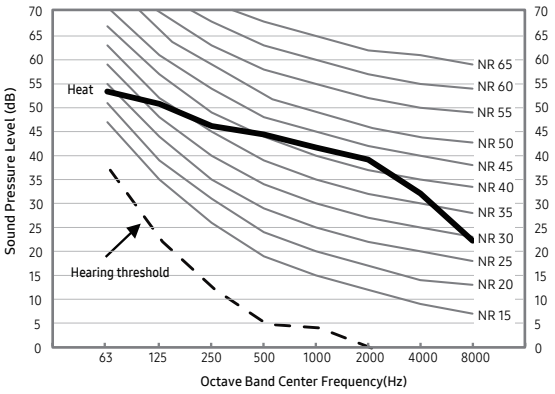

2. Outdoor Units

2-6. Sound data

Sound Pressure level

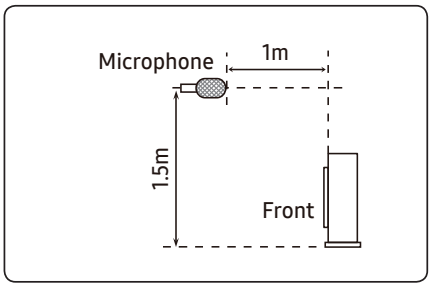

Unit: dB(A)

Model	Cooling	Heating
AE050RXYDEG/EU	45	45
AE080RXYDEG/EU	48	48
AE120RXYDEG/EU	50	50
AE160RXYDEG/EU	54	52

- NR Curve

1) AE050RXYDEG/EU

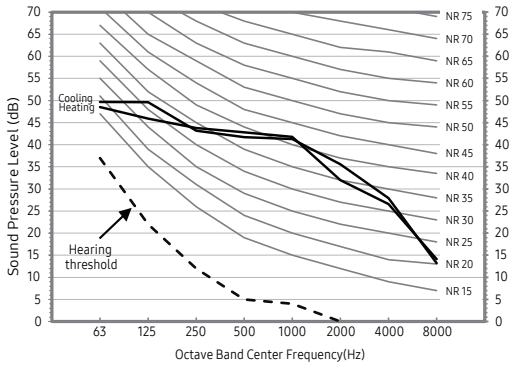

2) AE080RXYDEG/EU

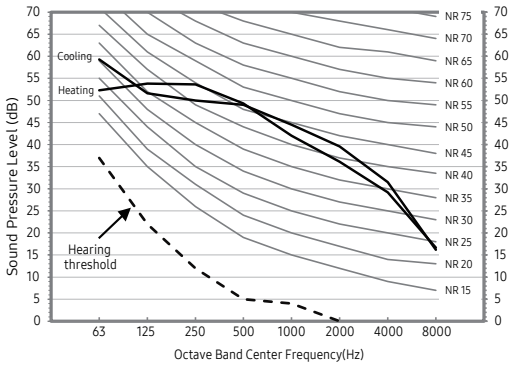

3) AE120RXYDEG/EU

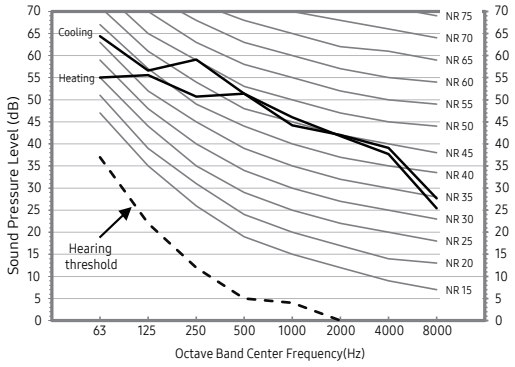

4) AE160RXYDEG/EU

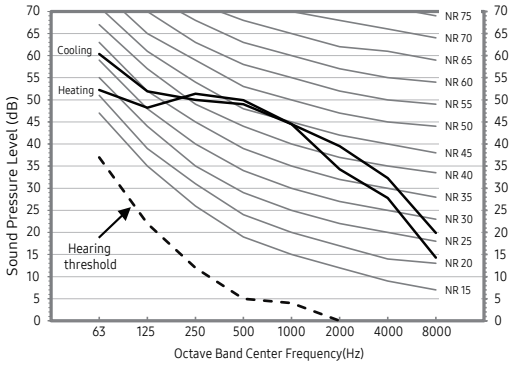

2. Outdoor Units

2-6. Sound data

Sound Pressure level

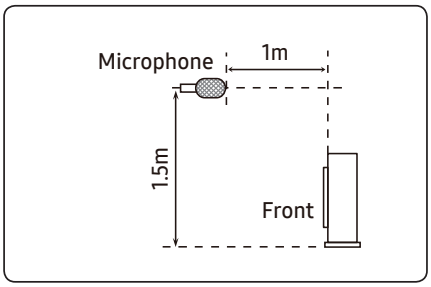

Unit: dB(A)

Model	Cooling	Heating
AE080RXYDGG/EU	48	48
AE120RXYDGG/EU	50	50
AE160RXYDGG/EU	54	52

- NR Curve

5) AE080RXYDGG/EU

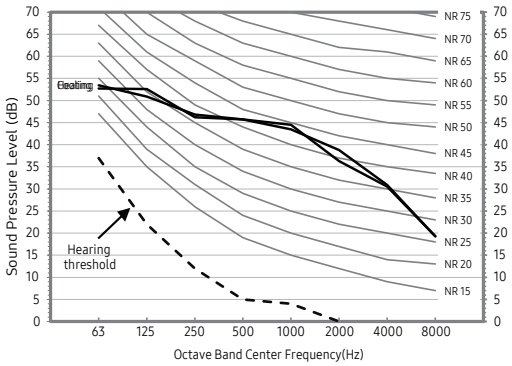

6) AE120RXYDGG/EU

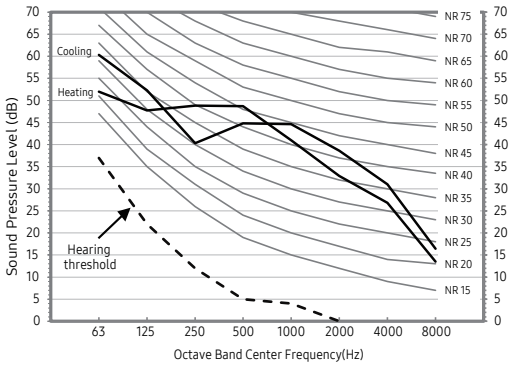

7) AE160RXYDGG/EU

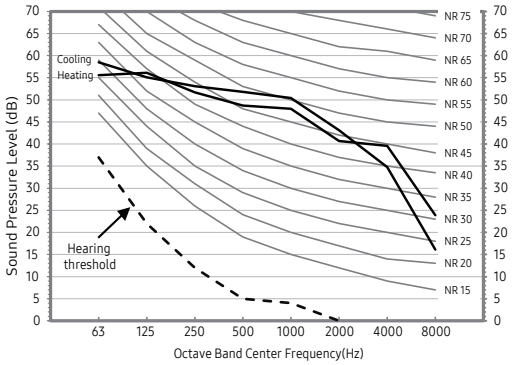

2. Outdoor Units

2-6. Sound data

Sound Power level

Unit: dB(A)

Model	Heating	Cooling
AE050CXYDEK/EU	55	55
AE080CXYDEK/EU	59	59
AE120CXYDEK/EU	60	60
AE160CXYDEK/EU	65	65

NOTE

- Specifications may be subject to change without prior notice
  - Sound power level is an absolute value that a sound source generates.
  - dBA = A-weighted sound power level.
  - Reference power : 1pW.
  - Measured according to ISO 3741.

- NR Curve

1) AE050CXYDEK/EU

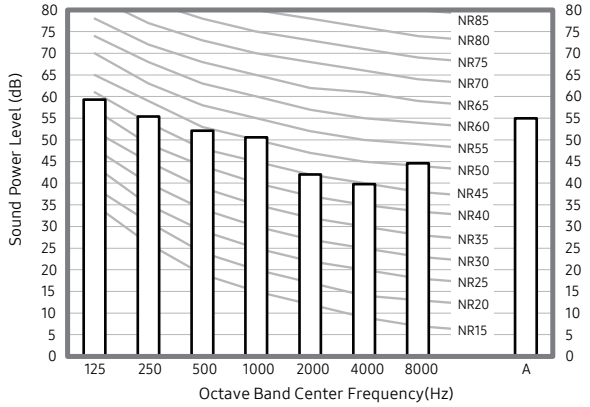

2) AE080CXYDEK/EU

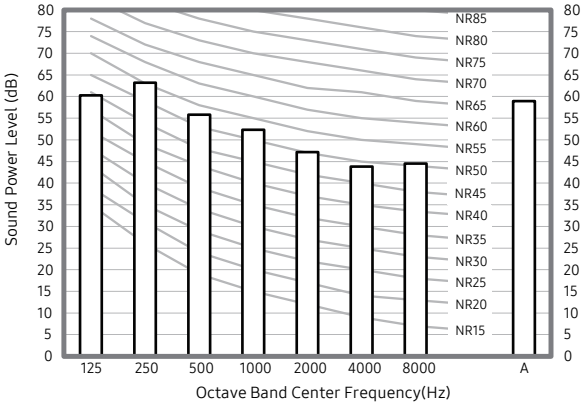

3) AE120CXYDEK/EU

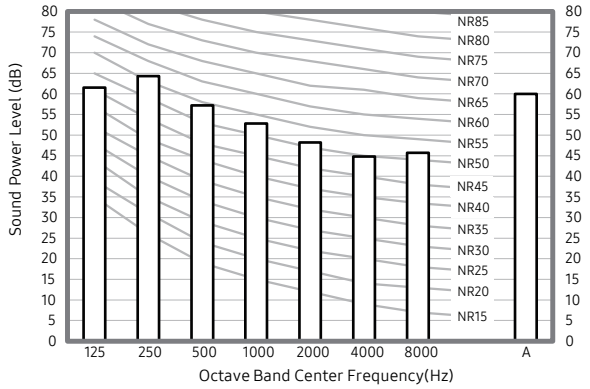

4) AE160CXYDEK/EU

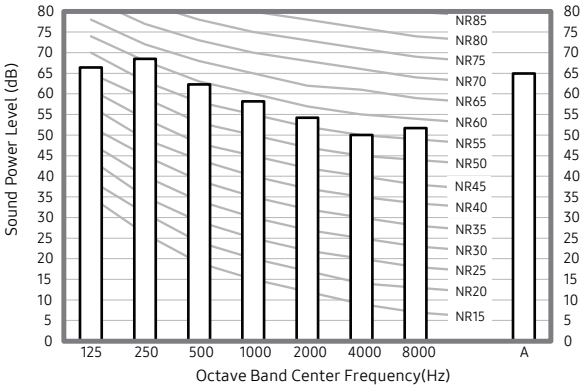

2. Outdoor Units

2-6. Sound data

Sound Power level

Unit: dB(A)

Model	Heating	Cooling
AE080CXYDGK/EU	59	59
AE120CXYDGK/EU	60	60
AE160CXYDGK/EU	65	65

NOTE

- Specifications may be subject to change without prior notice
  - Sound power level is an absolute value that a sound source generates.
  - dBA = A-weighted sound power level.
  - Reference power : 1pW.
  - Measured according to ISO 3741.

- NR Curve

5) AE080CXYDGK/EU

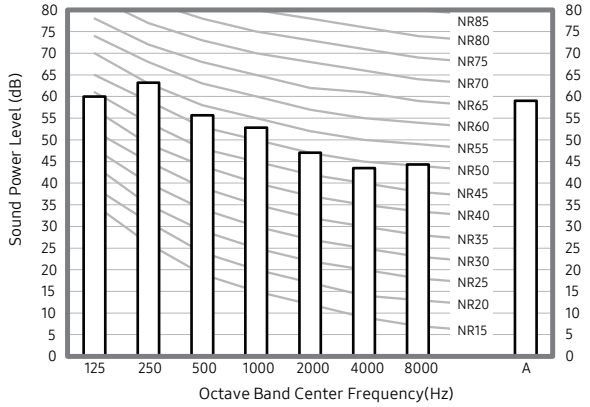

6) AE120CXYDGK/EU

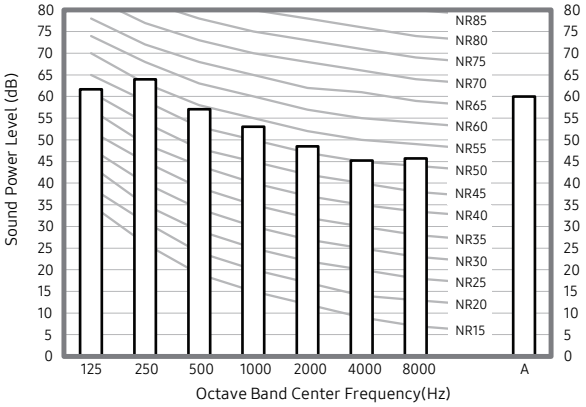

7) AE160CXYDGK/EU

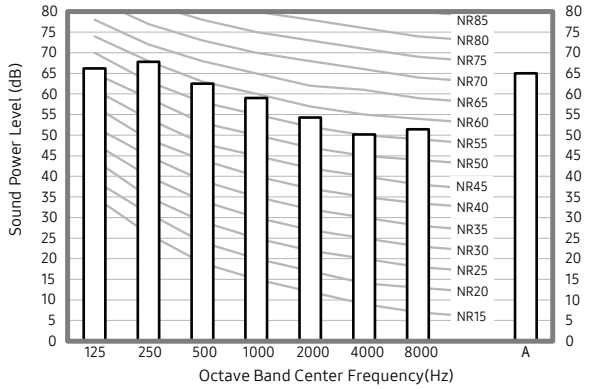

2. Outdoor Units

2-6. Sound data

Sound Power level

NOTE

- Specifications may be subject to change without prior notice
  - Sound power level is an absolute value that a sound source generates.
  - dBA = A-weighted sound power level.
  - Reference power : 1pW.
  - Measured according to ISO 3741.

Model	Power (dBA)
AE080BXYDEG/EU	56
AE120BXYDEG/EU	59
AE140BXYDEG/EU	60

1) AE080BXYDEG/EU

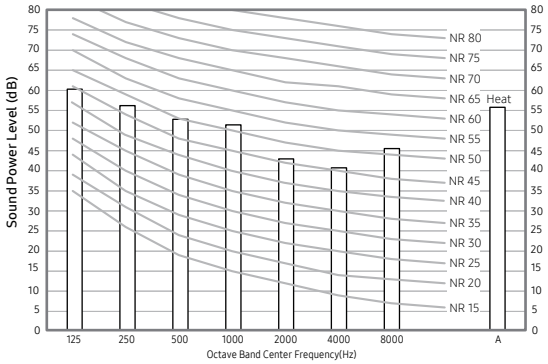

2) AE120BXYDEG/EU

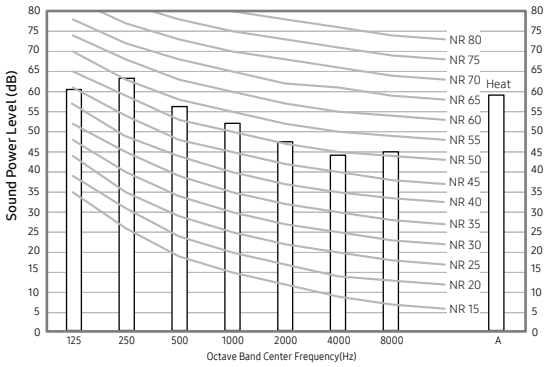

3) AE140BXYDEG/EU

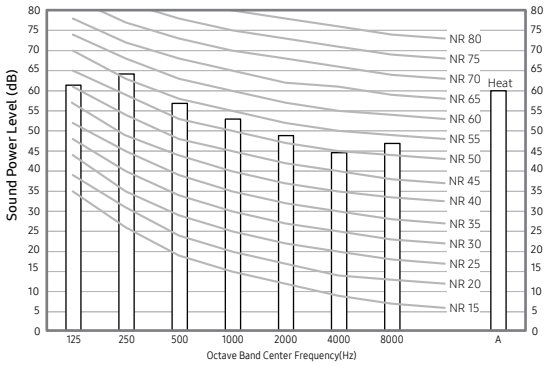

2. Outdoor Units

2-6. Sound data

Sound Power level

NOTE

- Specifications may be subject to change without prior notice
  - Sound power level is an absolute value that a sound source generates.
  - dBA = A-weighted sound power level.
  - Reference power : 1pW.
  - Measured according to ISO 3741.

Model	Power (dBA)
AE080BXYDGG/EU	56
AE120BXYDGG/EU	59
AE140BXYDGG/EU	60

4) AE080BXYDGG/EU

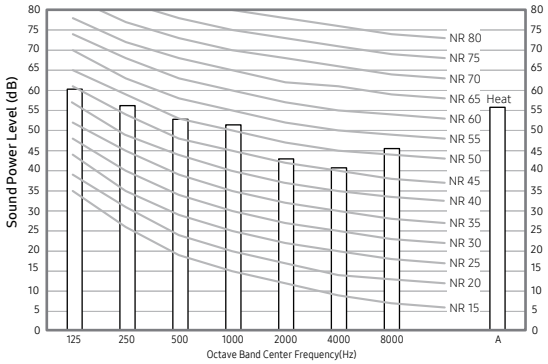

5) AE120BXYDGG/EU

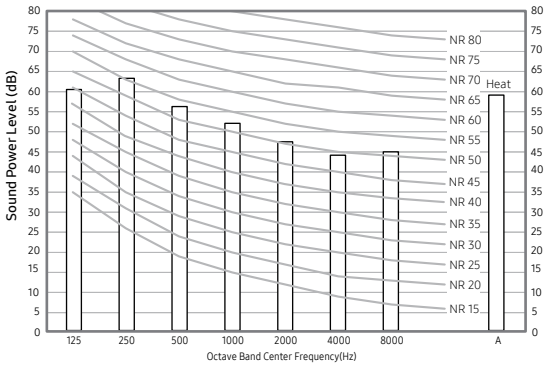

6) AE140BXYDGG/EU

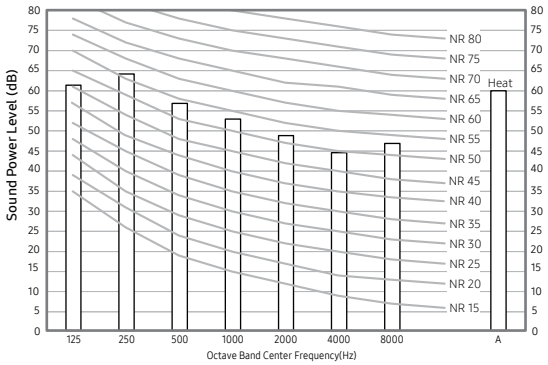

2. Outdoor Units

2-6. Sound data

Sound Power level

NOTE

- Specifications may be subject to change without prior notice
  - Sound power level is an absolute value that a sound source generates.
  - dBA = A-weighted sound power level.
  - Reference power : 1pW.
  - Measured according to ISO 3741.

Model	Power (dBA)
AE050RXYDEG/EU	61
AE080RXYDEG/EU	63
AE120RXYDEG/EU	64
AE160RXYDEG/EU	66

- NR Curve

1) AE050RXYDEG/EU

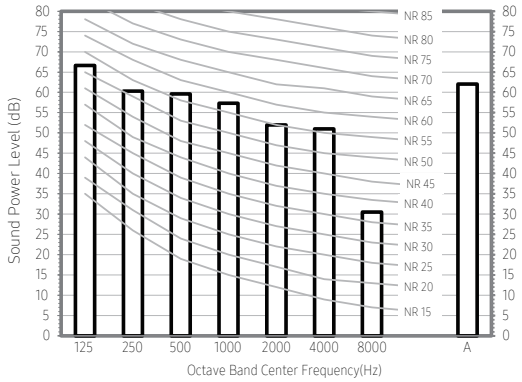

2) AE080RXYDEG/EU

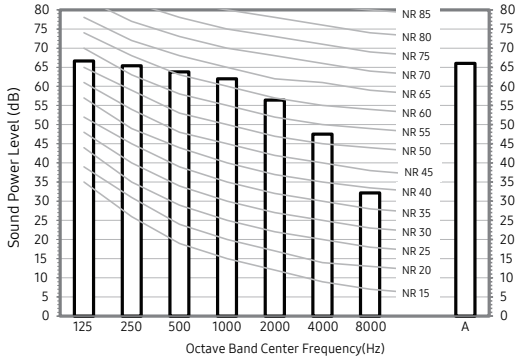

3) AE120RXYDEG/EU

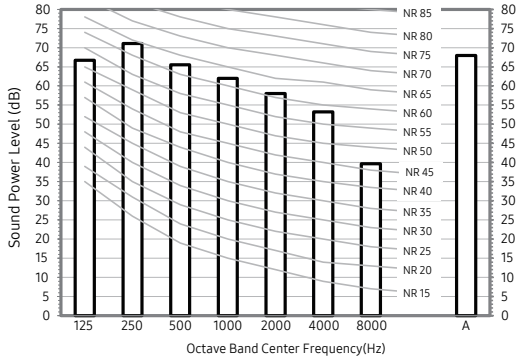

4) AE160RXYDEG/EU

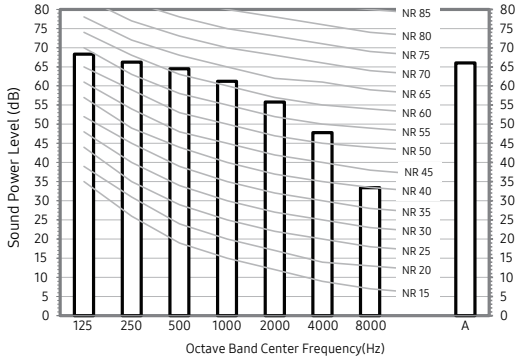

2. Outdoor Units

2-6. Sound data

Sound Power level

NOTE

- Specifications may be subject to change without prior notice
  - Sound power level is an absolute value that a sound source generates.
  - dBA = A-weighted sound power level.
  - Reference power : 1pW.
  - Measured according to ISO 3741.

Model	Power (dBA)
AE080RXYDGG/EU	63
AE120RXYDGG/EU	64
AE160RXYDGG/EU	66

- NR Curve

5) AE080RXYDGG/EU

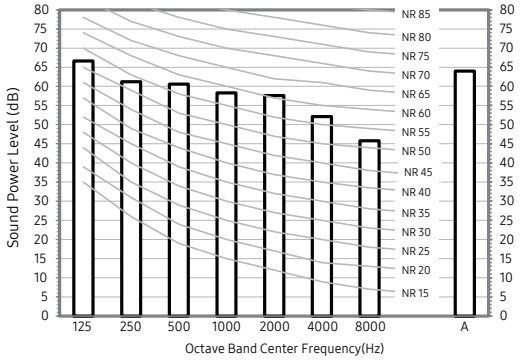

6) AE120RXYDGG/EU

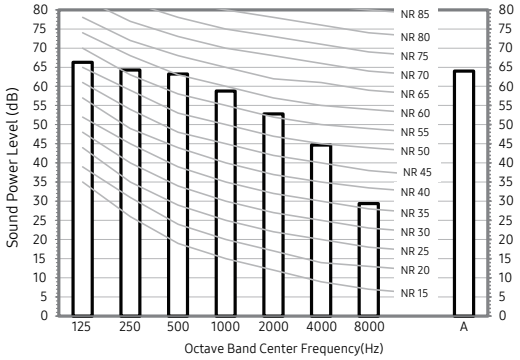

7) AE160RXYDGG/EU

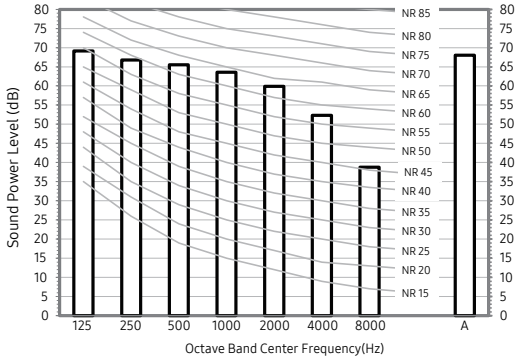

2. Outdoor Units

2-7. Operation range

EHS Mono R290

1) Cooling

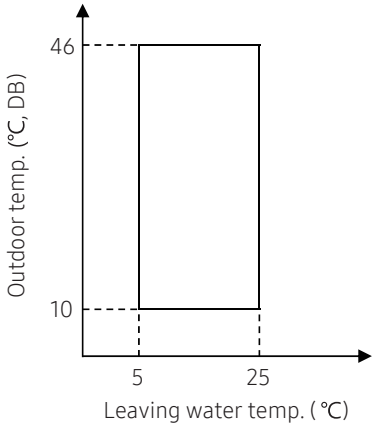

2) Heating

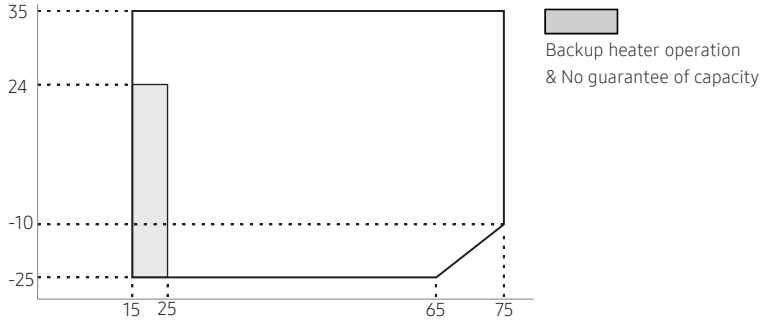

MONO Outdoor Unit		Water Temp. (℃)			Water Flow Rates (LPM)			Air Temp. (℃, DB/WB)		
		Min	Std	Max	Min	Std	Max	Min	Std	Max
Controller	Cooling	5	-	25						
	Heating	15	-	75						
Cooling	Inlet	-	23 (12*2)	30	7	Δ 5℃	58 (48*1)	10/-	35/24	46/28
	Outlet	5	18 (7*2)	25						
Heating	Inlet	5	30 (40*2)	-				-25/-	7/6	35/24
	Outlet	25 (15*3)	35 (45*2)	75						

*1) Model : AE050CXYDEK/EU
AE080CXYD*K/EU

*2) Eurovent Test Condition #2
*3) Back up heater operation.

3) DHW (Domestic Hot Water Tank)

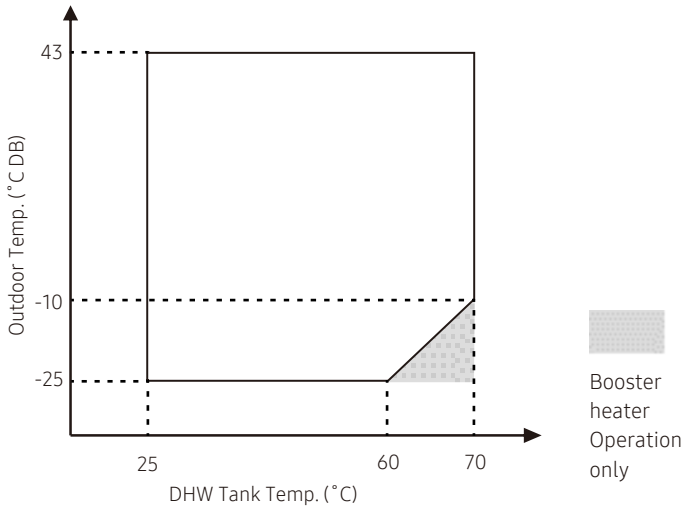

2. Outdoor Units

2-7. Operation range

EHS Mono HT Quiet

1) Cooling

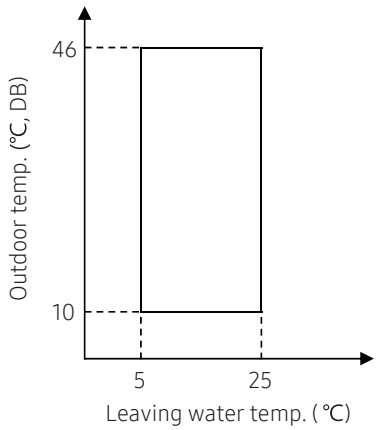

2) Heating

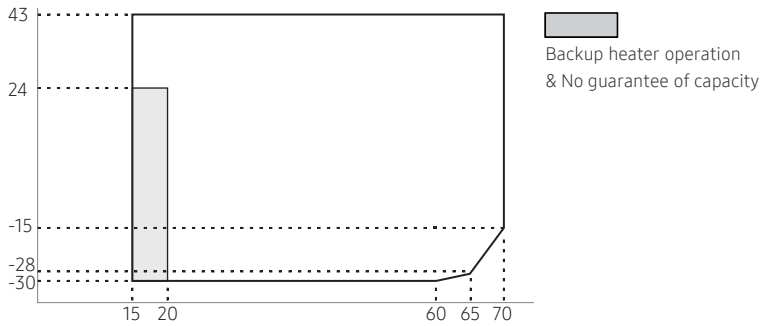

MONO Outdoor Unit		Water Temp. (℃)			Water Flow Rates (LPM)			Air Temp. (℃, DB/WB)		
		Min	Std	Max	Min	Std	Max	Min	Std	Max
Controller	Cooling	5	-	25						
	Heating	15	-	70						
Cooling	Inlet	-	23 (12*2)	30	7	Δ 5℃	58 (48*1)	10/-	35/24	46/28
	Outlet	5	18 (7*2)	25						
Heating	Inlet	5	30 (40*2)	-				-30/-	7/6	43/34.5
	Outlet	25 (15*3)	35 (45*2)	70						

*1) Model : AE080BXYDEG/EU
AE080BXYDGG/EU

*2) Eurovent Test Condition #2

*3) Back up heater operation.

3) DHW (Domestic Hot Water Tank)

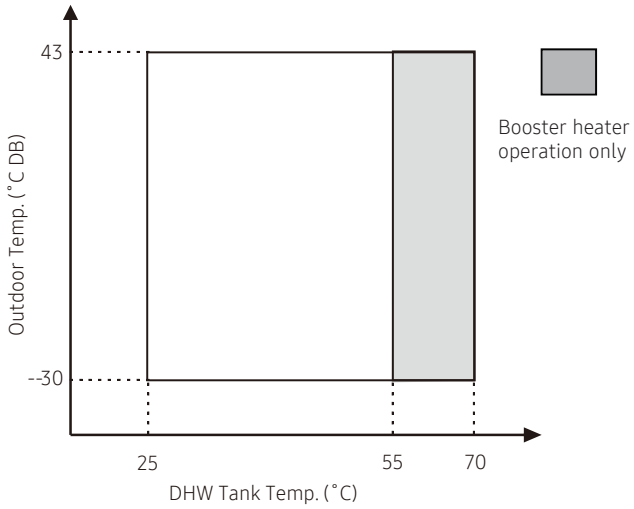

2. Outdoor Units

2-7. Operation range

EHS Mono R32

1) Cooling

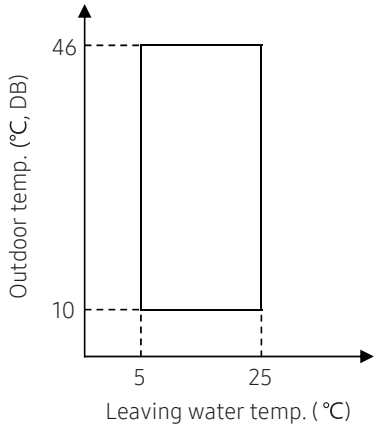

2) Heating

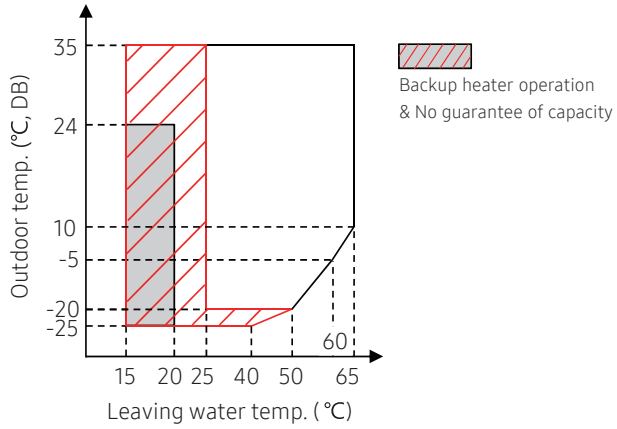

MONO Outdoor Unit		Water Temp. (℃)			Water Flow Rates (LPM)			Air Temp. (℃, DB/WB)		
		Min	Std	Max	Min	Std	Max	Min	Std	Max
Controller	Cooling	5	-	25						
	Heating	15	-	65						
Cooling	Inlet	-	23 (12*2)	30	12 (7*1)	Δ 5℃	58 (48*1)	10/-	35/24	46/28
	Outlet	5	18 (7*2)	25						
Heating	Inlet	5	30 (40*2)	-				-25/-	7/6	35/24
	Outlet	25 (15*3)	35 (45*2)	65						

*1) Model : AE050RXYDEG
AE080RXYDEG
AE080RXYDGG

*2) Eurovent Test Condition #2

*3) Back up heater operation.

※ Operation of outdoor unit possible, but no guarantee of capacity in this condition.
25℃ ≤ Outdoor temp <-20℃))

3) DHW (Domestic Hot Water Tank)

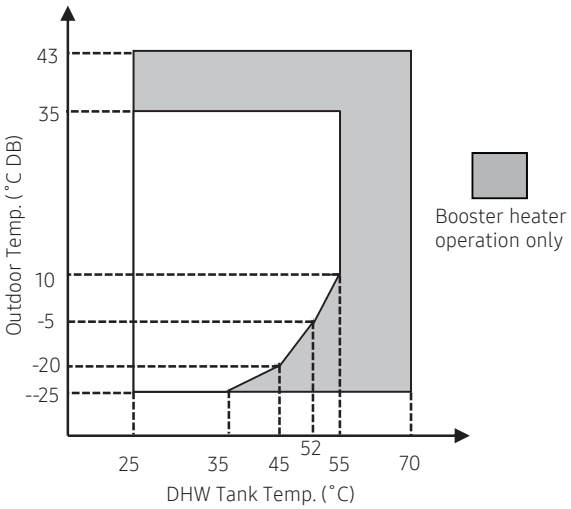

※ Special condition(35℃ < Outdoor temp. ≤ 43℃) is operated by only Booster Heater.
SAMSUNG doesn't supply DHW for EHS Split.
Since it is a reference data, you have to check DHW operation range for yours.

2. Outdoor Units

2-8. Piping diagram

AE050CXYDEK/EU, 080CXYD*K/EU

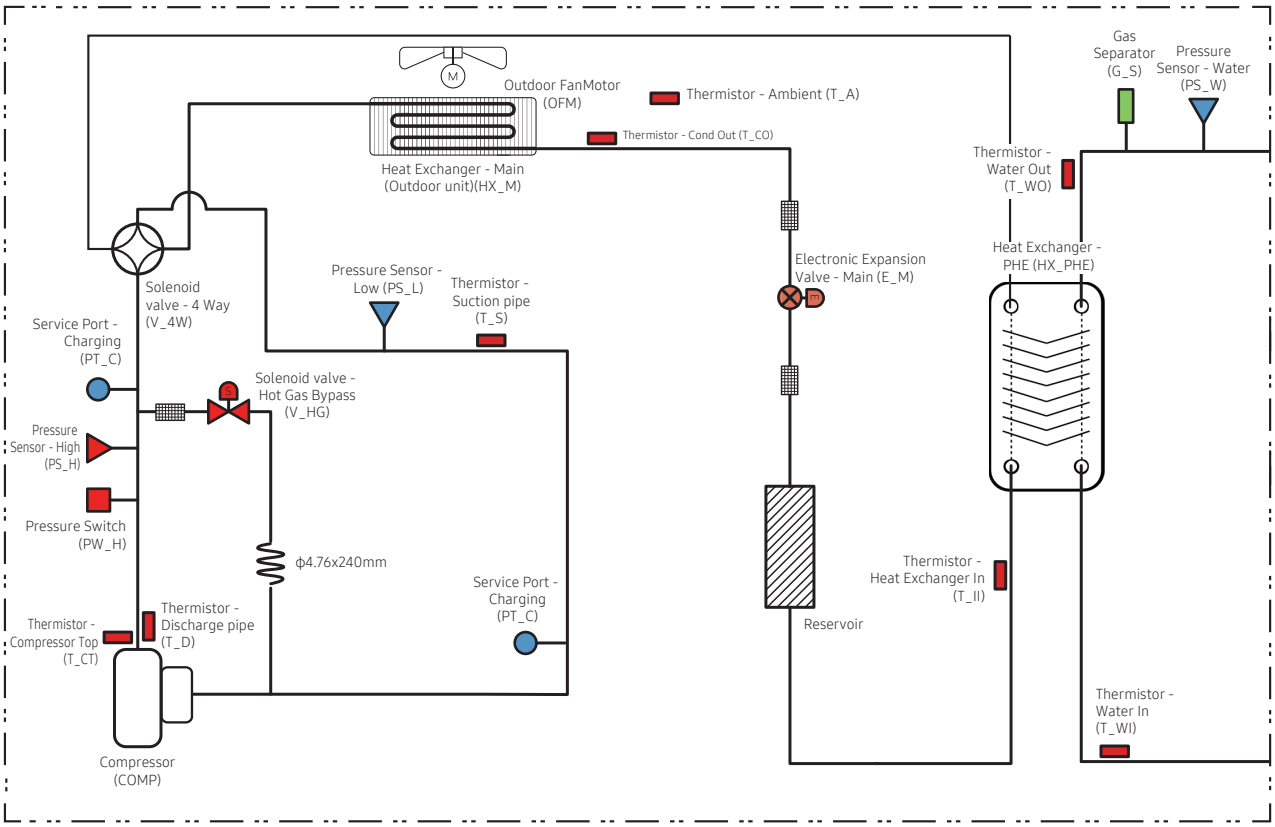

AE120/160CXYD*K/EU

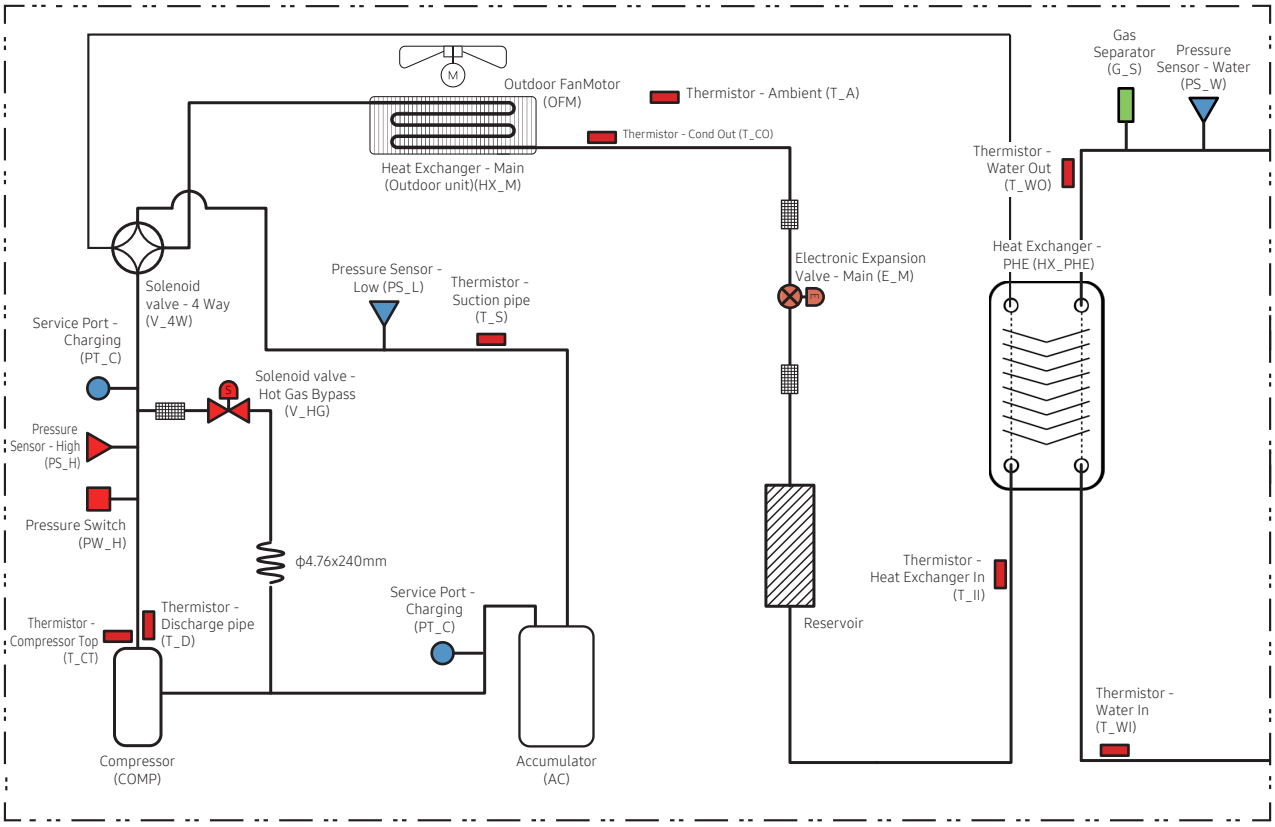

2. Outdoor Units

2-8. Piping diagram

AE080/120/140BXYD*G/EU

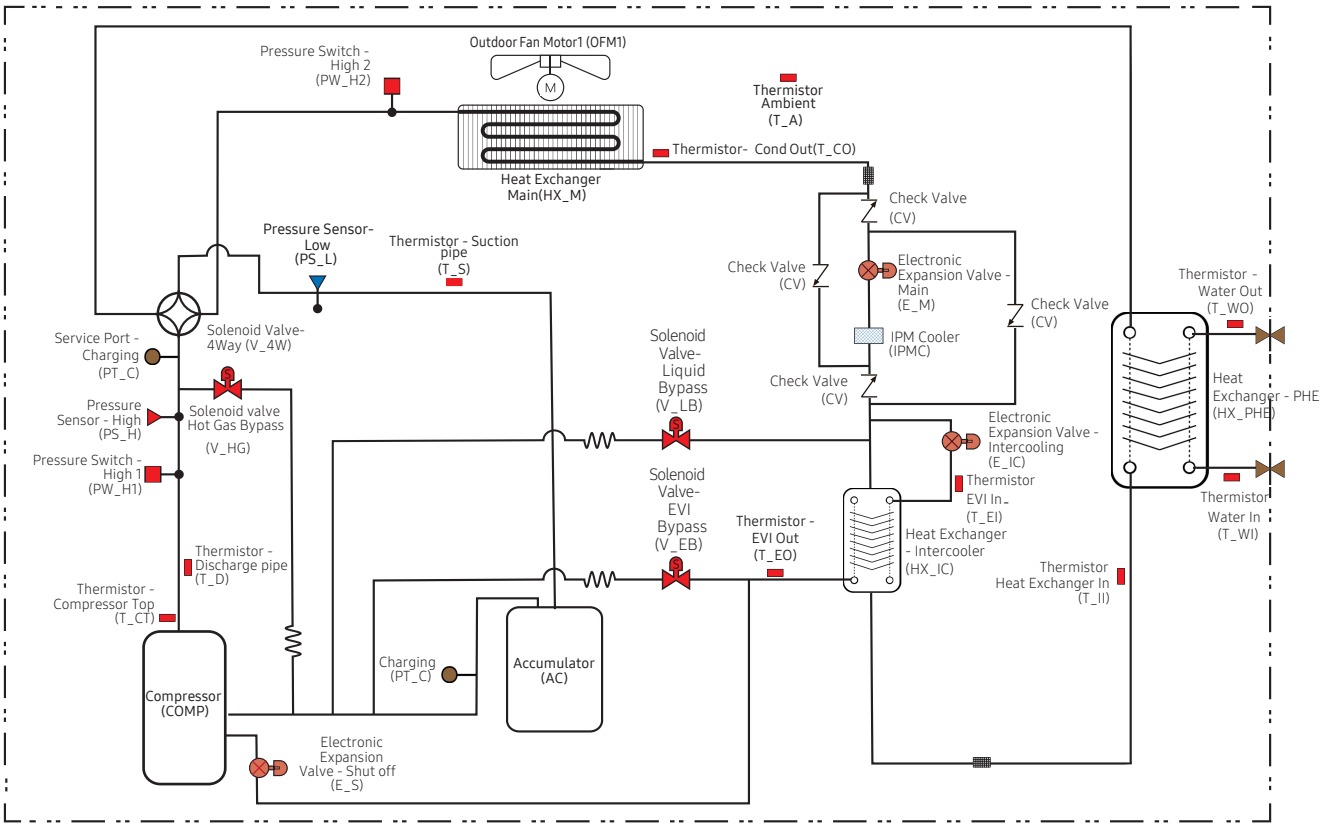

2. Outdoor Units

2-8. Piping diagram

AE050/080RXYD*G/EU

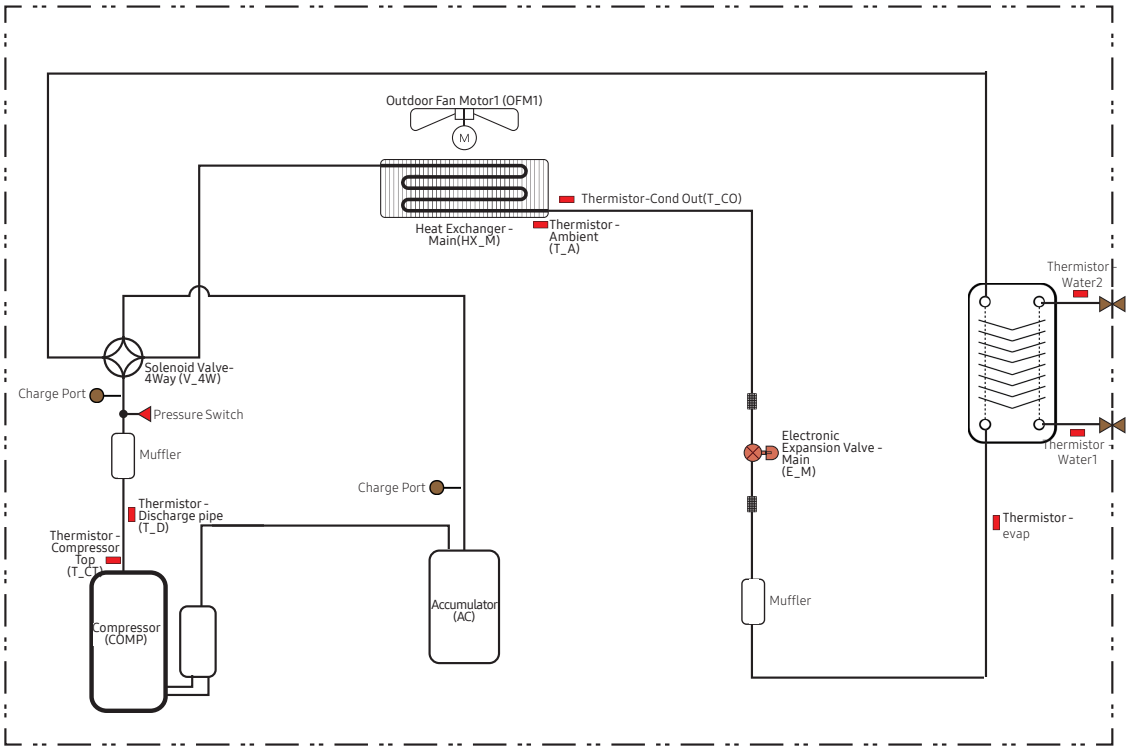

AE120/160RXYD*G/EU

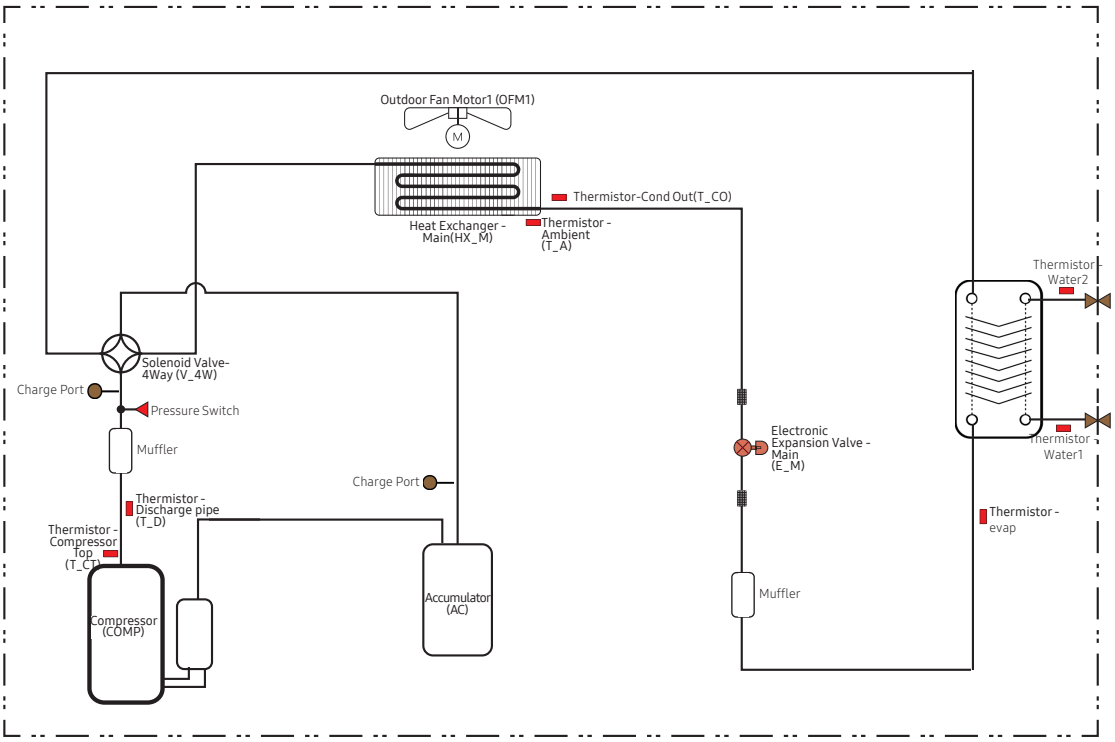

2. Outdoor Units

2-9. Capacity table

EHS Mono R290

1) Maximum Heating Capacity (Peak Value)

LWT (Leaving Water Temp.), Tamb (Ambient Temp.), HC (Heating Capacity), PI (Power input), WF (Water Flow)

Model	LWT (°C)	25			30			35			40			45			50			55			60			65			70			75		
	Tamb (°C)	HC (W)	PI (W)	WF (LPM)	HC (W)	PI (W)	WF (LPM)	HC (W)	PI (W)	WF (LPM)	HC (W)	PI (W)	WF (LPM)	HC (W)	PI (W)	WF (LPM)	HC (W)	PI (W)	WF (LPM)	HC (W)	PI (W)	WF (LPM)	HC (W)	PI (W)	WF (LPM)	HC (W)	PI (W)	WF (LPM)	HC (W)	PI (W)	WF (LPM)	HC (W)	PI (W)	WF (LPM)
AE050CXYDEK/EU	-25	3,850	1,980	11.1	3,695	1,970	10.6	3,540	1,950	10.2	3,470	1,990	10.0	3,390	2,020	9.8	3,350	2,110	9.7	3,310	2,220	7.0	3,250	2,290	7.0	3,190	2,380	7.0						
	-20	4,410	1,930	12.7	4,295	2,010	12.4	4,180	2,100	12.1	4,100	2,130	11.8	4,020	2,160	11.6	3,900	2,220	11.3	3,780	2,290	7.0	3,710	2,380	7.0	3,640	2,480	7.0						
	-15	4,900	1,850	14.1	4,815	2,000	13.9	4,730	2,180	13.6	4,620	2,190	13.3	4,520	2,210	13.1	4,410	2,290	12.8	4,300	2,390	7.8	4,220	2,480	7.7	4,140	2,590	7.0	4,040	2,610	7.0			
	-10	5,470	1,680	15.7	5,235	1,760	15.1	5,000	1,850	14.4	5,000	2,020	14.4	5,000	2,210	14.5	5,000	2,350	14.5	5,000	2,500	9.1	4,940	2,650	9.0	4,850	2,800	7.1	4,710	2,920	7.0	4,560	3,040	7.0
	-7	5,710	1,580	16.4	5,355	1,600	15.4	5,000	1,670	14.4	5,000	1,800	14.4	5,000	2,020	14.5	5,000	2,190	14.5	5,000	2,380	9.1	5,000	2,520	9.1	5,000	2,680	7.3	5,000	2,940	7.3	5,000	3,260	7.3
	-2	5,840	1,340	16.8	5,420	1,310	15.6	5,000	1,280	14.4	5,000	1,460	14.4	5,000	1,700	14.5	5,000	1,870	14.5	5,000	2,070	9.1	5,000	2,200	9.1	5,000	2,360	7.3	5,000	2,600	7.3	5,000	2,890	7.3
	2	5,900	1,170	17.0	5,450	1,160	15.7	5,000	1,160	14.4	5,000	1,310	14.4	5,000	1,520	14.5	5,000	1,650	14.5	5,000	1,810	9.1	5,000	1,990	9.1	5,000	2,200	7.3	5,000	2,390	7.3	5,000	2,610	7.3
	7	6,090	980	17.5	5,545	980	16.0	5,000	980	14.4	5,000	1,130	14.4	5,000	1,320	14.5	5,000	1,450	14.5	5,000	1,610	9.1	5,000	1,740	9.1	5,000	1,890	7.3	5,000	2,100	7.3	5,000	2,360	7.3
	12	6,400	920	18.4	6,270	1,010	18.1	6,140	1,110	17.7	6,080	1,220	17.6	6,010	1,340	17.4	5,980	1,510	17.3	5,950	1,730	10.8	5,920	1,820	10.8	5,880	2,070	8.6	5,850	2,290	8.5	5,820	2,480	8.5
	15	6,890	900	19.8	6,675	980	19.2	6,460	1,080	18.6	6,390	1,200	18.5	6,330	1,360	18.3	6,250	1,510	18.1	6,180	1,710	11.2	6,100	1,790	11.1	6,080	2,010	8.9	6,060	2,220	8.8	6,040	2,500	8.8
	20	7,490	850	21.5	7,225	950	20.8	6,960	1,080	20.1	6,880	1,220	19.9	6,790	1,400	19.6	6,700	1,520	19.4	6,610	1,670	12.0	6,530	1,770	11.9	6,480	2,020	9.4	6,470	2,270	9.4	6,390	2,560	9.4
	25	8,020	810	23.1	7,800	920	22.5	7,580	1,070	21.9	7,490	1,210	21.6	7,390	1,410	21.4	7,270	1,530	21.1	7,160	1,690	13.0	7,020	1,840	12.8	6,920	2,070	10.1	6,840	2,250	10.0	6,770	2,470	9.9
	30	8,510	770	24.5	8,305	880	23.9	8,100	1,030	23.4	7,990	1,190	23.1	7,880	1,400	22.8	7,820	1,530	22.7	7,750	1,700	14.1	7,690	1,880	14.0	7,620	2,120	11.1	7,550	2,280	11.0	7,410	2,460	10.8
	35	9,080	730	26.1	8,840	840	25.5	8,600	1,010	24.8	8,410	1,150	24.3	8,220	1,360	23.8	8,150	1,490	23.6	8,080	1,660	14.7	8,020	1,840	14.6	7,950	2,050	11.6	7,850	2,200	11.5	7,690	2,350	11.3
AE080CXYDEK/EU	-25	5,700	3,020	16.4	5,475	3,000	15.8	5,250	2,980	15.1	5,135	3,030	14.8	5,020	3,080	14.5	4,960	3,220	14.4	4,900	3,380	8.9	4,810	3,500	8.7	4,720	3,630	7.0						
	-20	6,600	2,970	19.0	6,425	3,090	18.5	6,250	3,230	18.0	6,130	3,270	17.7	6,010	3,320	17.4	5,830	3,420	16.9	5,650	3,530	10.2	5,550	3,670	10.1	5,450	3,820	7.9						
	-15	7,400	2,880	21.3	7,270	3,110	20.9	7,140	3,380	20.6	6,980	3,400	20.2	6,820	3,430	19.7	6,655	3,560	19.3	6,490	3,710	11.8	6,370	3,860	11.6	6,250	4,030	9.1	6,100	4,070	8.9			
	-10	8,250	2,610	23.7	8,125	2,820	23.4	8,000	3,080	23.1	7,940	3,310	22.9	7,880	3,580	22.8	7,730	3,730	22.4	7,580	3,910	13.7	7,450	4,120	13.5	7,320	4,360	10.7	7,105	4,530	10.4	6,890	4,740	10.1
	-7	8,620	2,460	24.8	8,310	2,560	23.9	8,000	2,670	23.1	8,000	2,960	23.1	8,000	3,330	23.1	8,000	3,600	23.2	8,000	3,920	14.5	8,000	4,160	14.5	8,000	4,420	11.6	7,775	4,710	11.3	7,550	5,070	11.0
	-2	8,810	2,080	25.3	8,405	2,090	24.2	8,000	2,110	23.1	8,000	2,410	23.1	8,000	2,810	23.1	8,000	3,080	23.2	8,000	3,400	14.5	8,000	3,630	14.5	8,000	3,880	11.6	8,000	4,280	11.7	8,000	4,760	11.7
	2	8,910	1,820	25.6	8,455	1,860	24.3	8,000	1,900	23.1	8,000	2,160	23.1	8,000	2,500	23.1	8,000	2,720	23.2	8,000	2,990	14.5	8,000	3,270	14.5	8,000	3,620	11.6	8,000	3,930	11.7	8,000	4,300	11.7
	7	9,190	1,520	26.4	8,595	1,570	24.7	8,000	1,630	23.1	8,000	1,860	23.1	8,000	2,160	23.1	8,000	2,390	23.2	8,000	2,670	14.5	8,000	2,870	14.5	8,000	3,110	11.6	8,000	3,460	11.7	8,000	3,880	11.7
	12	9,850	1,470	28.3	9,650	1,600	27.8	9,450	1,770	27.2	9,350	1,930	27.0	9,250	2,130	26.8	9,200	2,390	26.7	9,150	2,730	16.6	9,100	2,890	16.5	9,050	3,280	13.2	9,000	3,630	13.1	8,950	3,930	13.1
	15	10,400	1,390	29.9	10,075	1,520	29.0	9,750	1,680	28.1	9,650	1,870	27.9	9,550	2,110	27.6	9,440	2,350	27.4	9,330	2,670	16.9	9,210	2,780	16.7	9,180	3,120	13.4	9,150	3,450	13.4	9,110	3,880	13.3
	20	11,300	1,320	32.5	10,905	1,480	31.4	10,510	1,680	30.3	10,380	1,900	30.0	10,250	2,180	29.7	10,115	2,370	29.3	9,980	2,600	18.1	9,860	2,760	17.9	9,780	3,140	14.2	9,760	3,530	14.2	9,650	3,990	14.1
	25	12,110	1,270	34.8	11,775	1,430	33.9	11,440	1,660	33.0	11,300	1,880	32.6	11,160	2,190	32.3	10,980	2,390	31.8	10,800	2,620	19.6	10,600	2,860	19.3	10,450	3,210	15.2	10,320	3,490	15.1	10,220	3,840	15.0
	30	12,850	1,200	37.0	12,535	1,370	36.1	12,220	1,610	35.2	12,060	1,840	34.8	11,900	2,180	34.4	11,800	2,380	34.2	11,700	2,640	21.2	11,600	2,930	21.1	11,500	3,290	16.7	11,400	3,540	16.6	10,800	3,690	15.8
	35	13,700	1,140	39.4	13,340	1,310	38.4	12,980	1,570	37.4	12,690	1,790	36.6	12,400	2,110	35.9	12,300	2,320	35.7	12,200	2,580	22.1	12,100	2,850	22.0	12,000	3,190	17.5	11,100	3,200	16.2	10,100	3,180	14.8
AE080CXYDGK/EU	-25	5,700	3,020	16.4	5,475	3,000	15.8	5,250	2,980	15.1	5,135	3,030	14.8	5,020	3,080	14.5	4,960	3,220	14.4	4,900	3,380	8.9	4,810	3,500	8.7	4,720	3,630	7.0						
	-20	6,600	2,970	19.0	6,425	3,090	18.5	6,250	3,230	18.0	6,130	3,270	17.7	6,010	3,320	17.4	5,830	3,420	16.9	5,650	3,530	10.2	5,550	3,670	10.1	5,450	3,820	7.9						
	-15	7,400	2,880	21.3	7,270	3,110	20.9	7,140	3,380	20.6	6,980	3,400	20.2	6,820	3,430	19.7	6,655	3,560	19.3	6,490	3,710	11.8	6,370	3,860	11.6	6,250	4,030	9.1	6,100	4,070	8.9			
	-10	8,250	2,610	23.7	8,125	2,820	23.4	8,000	3,080	23.1	7,940	3,310	22.9	7,880	3,580	22.8	7,730	3,730	22.4	7,580	3,910	13.7	7,450	4,120	13.5	7,320	4,360	10.7	7,105	4,600	10.4	6,890	4,890	10.1
	-7	8,620	2,460	24.8	8,310	2,560	23.9	8,000	2,670	23.1	8,000	2,960	23.1	8,000	3,330	23.1	8,000	3,600	23.2	8,000	3,920	14.5	8,000	4,160	14.5	8,000	4,420	11.6	7,775	4,710	11.3	7,550	5,070	11.0
	-2	8,810	2,080	25.3	8,405	2,090	24.2	8,000	2,110	23.1	8,000	2,410	23.1	8,000	2,810	23.1	8,000	3,080	23.2	8,000	3,400	14.5	8,000	3,630	14.5	8,000	3,880	11.6	8,000	4,280	11.7	8,000	4,760	11.7
	2	8,910	1,820	25.6	8,455	1,860	24.3	8,000	1,900	23.1	8,000	2,160	23.1	8,000	2,500	23.1	8,000	2,720	23.2	8,000	2,990	14.5	8,000	3,270	14.5	8,000	3,620	11.6	8,000	3,930	11.7	8,000	4,300	11.7
	7	9,190	1,520	26.4	8,595	1,570	24.7	8,000	1,630	23.1	8,000	1,860	23.1	8,000	2,160	23.1	8,000	2,390	23.2	8,000	2,670	14.5	8,000	2,870	14.5	8,000	3,110	11.6	8,000	3,460	11.7	8,000	3,880	11.7
	12	9,850	1,470	28.3	9,650	1,600	27.8	9,450	1,770	27.2	9,350	1,930	27.0	9,250	2,130	26.8	9,200	2,390	26.7	9,150	2,730	16.6	9,100	2,890	16.5	9,050	3,280	13.2	9,000	3,630	13.1	8,950	3,930	13.1
	15	10,400	1,390	29.9	10,075	1,520	29.0	9,750	1,680	28.1	9,650	1,870	27.9	9,550	2,110	27.6	9,440	2,350	27.4	9,330	2,670	16.9	9,210	2,780	16.7	9,180	3,120	13.4	9,150	3,450	13.4	9,110	3,880	13.3
	20	11,300	1,320	32.5	10,905	1,480	31.4	10,510	1,680	30.3	10,380	1,900	30.0	10,250	2,180	29.7	10,115	2,370	29.3	9,980	2,600	18.1	9,860	2,760	17.9	9,780	3,140	14.2	9,760	3,530	14.2	9,650	3,990	14.1
	25	12,110	1,270	34.8	11,775	1,430	33.9	11,440	1,660	33.0	11,300	1,880	32.6	11,160	2,190	32.3	10,980	2,390	31.8	10,800	2,620	19.6	10,600	2,860	19.3	10,450	3,210	15.2	10,320	3,490	15.1	10,220	3,840	15.0
	30	12,850	1,200	37.0	12,535	1,370	36.1	12,220	1,610	35.2	12,060	1,840	34.8	11,900	2,180	34.4	11,800	2,380	34.2	11,700	2,640	21.2	11,600	2,930	21.1	11,500	3,290	16.7	11,400	3,540	16.6	11,300	3,880	16.5
	35	13,700	1,140	39.4	13,340	1,310	38.4	12,980	1,570	37.4	12,690	1,790	36.6	12,400	2,110	35.9	12,300	2,320	35.7	12,200	2,580	22.1	12,100	2,850	22.0	12,000	3,190	17.5	11,100	3,260	16.2	11,820	3,880	17.3
AE120CXYDEK/EU	-25	9,800	4,830	28.2	9,650	4,990	27.8	9,500	5,160	27.4	9,400	5,450	27.1	9,300	5,780	26.9	9,150	5,950	26.5	9,000	6,200	16.3	8,850	6,420	16.1	8,800	6,720	12.8						
	-20	10,500	4,550	30.2	10,400	4,790	29.9	10,300	5,070	29.7	10,250	5,360	29.6	10,150	5,660	29.4	10,100	5,940	29.3	10,000	6,250	18.1	9,850	6,510	17.9	9,760	6,920	14.2						
	-15	11,700	4,460	33.6	11,420	4,780	32.9	11,150	5,180	34.6	11,125	5,400	32.1	11,075	5,620	32.0	11,050	5,900	32.0	11,000	6,220	19.9	10,930	6,580	19.9	10,680	6,960	15.6	9,800	6,710	14.3			
	-10	12,890	3,710	37.1	12,445	4,100	35.8	12,000	4,620	34.6	12,000	5,050	34.7	12,000	5,500	34.7	12,000	5,760	34.8	12,000	6,140	21.8	12,000	6,700	21.8	11,500	6,970	16.7	10,660	6,940	15.6	9,940	6,900	14.5
	-7	12,930	3,360	37.2	12,470	3,640	35.9	12,000	4,000	34.6	12,000	4,430	34.7	12,000	5,010	34.7	12,000	5,460	34.8	12,000	5,860	21.8	12,000	6,230	21.8	12,000	6,770	17.5	11,270	6,970	16.5	10,200	6,900	14.9
	-2	13,220	3,100	38.0	12,610	3,160	36.3	12,000	3,140	34.6	12,000	3,630	34.7	12,000	4,190	34.7	12,000	4,600	34.8	12,000	5,070	21.8	12,000	5,390	21.8	12,000	5,940	17.5	12,000	6,550	17.5	11,680	6,880	17.1
	2	13,370	2,660	38.5	12,680	2,800	36.5	12,000	2,790	34.6	12,000	3,210	34.7	12,000	3,640	34.7	12,000	4,110	34.8	12,000	4,490	21.8	12,000	4,940	21.8	12,000	5,540	17.5	12,000	6,020	17.5	12,000	6,450	17.6
	7	13,790	2,180	39.7	12,890	2,360	37.1	12,000	2,500	34.6	12,000	2,790	34.7	12,000	3,240	34.7	12,000	3,550	34.8	12,000	4,000	21.8	12,000	4,270	21.8	12,000	4,710	17.5	12,000	5,290	17.5	12,000	5,880	17.6
	12	14,780	2,190	42.5	14,480	2,420	41.7	14,180	2,660	40.9	14,030	2,900	40.5	13,880	3,260	40.2	13,800	3,570	40.0	13,730	4,090	24.9	13,650	4,330	24.8	13,580	4,880	19.8	13,500	5,480	19.7	13,430	5,860	19.7
	15	15,600	2,100	44.9	15,110	2,260	43.5	14,630	2,510	42.2	14,480	2,780	41.8	14,330	3,250	41.5	14,160	3,540	41.1	14,000	3,990	25.4	13,820	4,140	25.1	13,770	4,650	20.1	13,730	5,130	20.0	13,670	5,820	20.0
	20	16,950	1,990	48.7	16,360	2,230	47.1	15,770	2,510	45.5	15,570	2,840	45.0	15,380	3,300	44.5	15,170	3,590	44.0	14,970	3,870	27.1	14,790	4,140	26.9	14,670	4,720	21.4	14,640	5,290	21.4	14,620	5,850	21.4
	25	18,170	1,900	52.3	17,660	2,150	50.8	17,160	2,480	49.5	16,950	2,840	49.0	16,740	3,210	48.4	16,470	3,540	47.7	16,200	3,920	29.4	15,900	4,250	28.9	15,680	4,870	22.8	15,480	5,210	22.6	15,000	5,470	21.9
	30	19,280	1,790	55.4	18,800	2,040	54.1	18,330	2,400	52.9	18,090	2,770	52.2	17,850	3,230	51.6	17,700	3,560	51.3	17,550	4,000	31.8	17,400	4,350	31.6	17,250	4,920	25.1	15,900	5,050	23.2	14,900	5,050	21.8
	35	20,550	1,720	58.0	20,010	1,950	57.6	19,470	2,350	56.1	19,040	2,710	55.0	18,600	3,130	53.8	18,450	3,480	53.5	18,300	3,890	33.2	18,150	4,260	33.0	17,250	4,620	25.1	15,900	4,600	23.2	14,750	4,600	21.6
AE120CXYDGK/EU	-25	9,800	4,830	28.2	9,650	4,990	27.8	9,500	5,160	27.4	9,450	5,480	27.3	9,400	5,840	27.2	9,380	6,100	27.2	9,350	6,440	17.0	9,300	6,890	16.9	9,250	7,400	13.5						
	-20	11,000	4,760	31.6	10,900	5,020	31.4	10,800	5,320	31.1	10,750	5,630	31.0	10,650	5,940	30.8	10,550	6,210	30.6	10,350	6,470	18.8	10,250	6,770	18.6	10,150	7,360	14.8						
	-15	11,700	4,460	33.6	11,420	4,780	32.9	11,150	5,180	32.1	11,125	5,400	32.1	11,075	5,620	32.0	11,050	5,900	32.0	11,000	6,220	19.9	10,930	6,580	19.9	10,870	7,200	15.8	10,400	7,270	15.2			
	-10	12,890	3,710	37.1	12,445	4,100	35.8	12,000	4,620	34.6	12,000	5,050	34.7	12,000	5,500	34.7	12,000	5,760	34.8	12,000	6,140	21.8	12,000	6,700	21.8	12,000	7,500	17.5	11,100	7,450	16.2	10,450	7,410	15.3
	-7	12,930	3,360	37.2	12,470	3,640	35.9	12,000	4,000	34.6	12,000	4,430	34.7	12,000	5,010	34.7	12,000	5,460	34.8	12,000	5,860	21.8	12,000	6,230	21.8	12,000	6,770	17.5	11,800	7,520	17.2	11,500	7,930	16.8
	-2	13,220	3,100	38.0	12,610	3,160	36.3	12,000	3,140	34.6	12,000	3,630	34.7	12,000	4,190	34.7	12,000	4,600	34.8	12,000	5,070	21.8	12,000	5,390	21.8	12,000	5,940	17.5	12,000	6,550	17.5	12,000	7,410	17.6
	2	13,370	2,660	38.5	12,680	2,800	36.5	12,000	2,790	34.6	12,000	3,210	34.7	12,000	3,640	34.7	12,000	4,110	34.8	12,000	4,490	21.8	12,000	4,940	21.8	12,000	5,540	17.5	12,000	6,020	17.5	12,000	6,450	17.6
	7	13,790	2,180	39.7	12,890	2,360	37.1	12,000	2,500	34.6	12,000	2,790	34.7	12,000	3,240	34.7	12,000	3,550	34.8	12,000	4,000	21.8	12,000	4,270	21.8	12,000	4,710	17.5	12,000	5,290	17.5	12,000	5,880	17.6
	12	14,780	2,190	42.5	14,480	2,420	41.7	14,180	2,660	40.9	14,030	2,900	40.5	13,880	3,260	40.2	13,800	3,570	40.0	13,730	4,090	24.9	13,650	4,330	24.8	13,580	4,880	19.8	13,500	5,480	19.7	13,430	5,860	19.7
	15	15,600	2,100	44.9	15,110	2,260	43.5	14,630	2,510	42.2	14,480	2,780	41.8	14,330	3,250	41.5	14,160	3,540	41.1	14,000	3,990	25.4	13,820	4,140	25.1	13,770	4,650	20.1	13,730	5,130	20.0	13,670	5,820	20.0
	20	16,950	1,990	48.7	16,360	2,230	47.1	15,770	2,510	45.5	15,380	3,300	44.5	15,170	3,590	44.0	14,970	3,870	27.1	14,790	4,140	26.9	14,670	4,720	21.4	14,640	5,290	21.4	14,620	5,850	21.4
	25	18,170	1,900	52.3	17,660	2,150	50.8	17,160	2,480	49.5	16,950	2,840	49.0	16,740	3,210	48.4	16,470	3,540	47.7	16,200	3,920	29.4	15,900	4,250	28.9	15,680	4,870	22.8	15,480	5,210	22.6	15,330	5,590	22.4
	30	19,280	1,790	55.4	18,800	2,040	54.1	18,330	2,400	52.9	18,090	2,770	52.2	17,850	3,230	51.6	17,700	3,560	51.3	17,550	4,000	31.8	17,400	4,350	31.6	17,250	4,920	25.1	16,850	5,190	24.6	16,390	5,560	24.0
	35	20,550	1,720	58.0	20,010	1,950	57.6	19,470	2,350	56.1	19,040	2,710	55.0	18,600	3,130	53.8	18,450	3,480	53.5	18,300	3,890	33.2	18,150	4,260	33.0	17,950	4,810	26.1	17,750	5,100	25.9	17,560	5,480	25.7

2. Outdoor Units

2-9. Capacity table

EHS Mono R290

1) Maximum Heating Capacity (Peak Value)

LWT (Leaving Water Temp.), Tamb (Ambient Temp.), HC (Heating Capacity), PI (Power input), WF (Water Flow)

Model	LWT (°C)	25			30			35			40			45			50			55			60			65			70			75		
	Tamb (°C)	HC (W)	PI (W)	WF (LPM)	HC (W)	PI (W)	WF (LPM)	HC (W)	PI (W)	WF (LPM)	HC (W)	PI (W)	WF (LPM)	HC (W)	PI (W)	WF (LPM)	HC (W)	PI (W)	WF (LPM)	HC (W)	PI (W)	WF (LPM)	HC (W)	PI (W)	WF (LPM)	HC (W)	PI (W)	WF (LPM)	HC (W)	PI (W)	WF (LPM)	HC (W)	PI (W)	WF (LPM)
AE160CXYDEK/EU	-25	9800	4830	28.2	10650	5630	30.7	11500	6570	33.2	11050	6680	31.9	10600	6790	30.7	10370	6950	30.1	9800	6950	17.8	9390	6950	17.1	8800	6720	12.8						
	-20	13300	6240	38.3	13135	6570	37.8	12970	6940	37.4	12400	6940	35.8	11830	6950	34.2	11460	6950	33.2	11100	6940	20.1	10190	6940	18.5	9760	6920	14.2						
	-15	14980	6350	43.1	14370	6620	41.4	13760	6950	39.7	13390	6950	38.7	13010	6950	37.6	12630	6950	36.6	11880	6950	21.5	11070	6950	20.1	10680	6960	15.6	9800	6710	14.3			
	-10	16200	5180	46.6	16100	5930	46.4	16000	6960	46.2	15195	6950	43.9	14390	6950	41.6	13890	6950	40.3	13320	6950	24.2	12230	6950	22.2	11500	6970	16.7	10660	6940	15.6	9940	6900	14.5
	-7	16250	4690	46.7	16125	5150	46.4	16000	5710	46.2	15600	6170	45.1	15200	6740	44.0	14430	6770	41.8	13810	6950	25.0	12720	6950	23.1	11820	6940	17.2	11270	6970	16.5	10200	6900	14.9
	-2	16300	4250	46.9	16150	4410	46.5	16000	4590	46.2	15800	5140	45.6	15600	5860	45.1	15500	6190	44.9	15400	6850	27.9	14700	6950	26.7	13450	6940	19.6	12050	6920	17.6	11680	6880	17.1
	2	16400	3480	47.2	16200	3760	46.6	16000	4100	46.2	16000	4640	46.2	16000	5330	46.3	16000	5710	46.4	16000	6300	29.0	15500	6720	28.2	14420	6940	21.0	13110	6920	19.1	12600	6920	18.4
	7	17500	3110	50.3	16750	3310	48.2	16000	3550	46.2	16000	4000	46.2	16000	4570	46.3	16000	4940	46.4	16000	5520	29.0	16000	5930	29.1	16000	6540	23.3	14890	6910	21.7	13400	6910	19.6
	12	18520	3050	53.3	18150	3290	52.3	17770	3580	51.2	17585	3940	50.8	17400	4390	50.3	17300	4660	50.2	17210	5340	31.2	17110	5600	31.1	17020	6370	24.8	15900	6680	23.2	15400	6700	22.5
	15	19970	2990	57.4	19285	3190	55.5	18600	3430	53.6	18500	3860	53.4	18400	4420	53.2	18120	4720	52.5	17920	5320	32.5	17760	5480	32.3	17500	6360	25.5	15900	6360	23.2	15400	6360	22.5
	20	20400	2660	58.0	19770	2930	56.9	19140	3280	55.2	18975	3730	54.8	18810	4340	54.4	18610	4580	54.0	18400	4960	33.4	18210	5260	33.1	17600	6050	25.6	15900	6050	23.2	15100	6040	22.1
	25	20830	2420	58.0	20255	2690	58.0	19680	3060	56.7	19450	3420	56.2	19220	3880	55.6	19100	4280	55.4	19050	4800	34.5	18800	5110	34.2	17600	5480	25.6	15900	5480	23.2	15000	5470	21.9
	30	22110	2280	58.0	21565	2560	58.0	21020	2960	58.0	20745	3390	58.0	20470	3990	58.0	20300	4250	58.0	20010	4750	36.3	19600	5050	35.6	17600	5050	25.6	15900	5050	23.2	14900	5050	21.8
	35	23560	2190	58.0	22945	2490	58.0	22330	2900	58.0	21830	3300	58.0	21330	3860	58.0	21160	4150	58.0	20500	4540	37.2	19600	4600	35.6	17600	4600	25.6	15900	4600	23.2	14750	4600	21.6
AE160CXYDGK/EU	-25	9800	4830	28.2	10650	5630	30.7	11500	6570	33.2	11400	7000	32.9	11300	7480	32.7	11200	7800	32.5	11000	8270	19.9	10800	8570	19.6	10600	8880	15.4						
	-20	13300	6240	38.3	13135	6570	37.8	12970	6940	37.4	12500	7030	36.1	12400	7460	35.9	12300	7730	35.7	12100	7900	21.9	11700	8540	21.3	11500	8850	16.7						
	-15	14980	6350	43.1	14370	6620	41.4	13760	6950	39.7	13450	7000	38.8	13100	7020	37.9	12850	7130	37.3	12560	7550	22.8	12260	8100	22.3	11860	8140	17.3	10800	7990				
	-10	16200	5180	46.6	16100	5930	46.4	16000	6960	46.2	15195	6950	43.9	14390	6950	41.6	13890	6950	40.3	13320	6950	24.2	12860	7490	23.4	12250	7660	17.8	11000	7490	16.1	10500	7760	15.4
	-7	16250	4690	46.7	16125	5150	46.4	16000	5710	46.2	15600	6170	45.1	15200	6740	44.0	14430	6770	41.8	13810	6950	25.0	13520	7550	24.6	13210	8010	19.2	11850	7500	17.3	11450	8010	16.8
	-2	16300	4250	46.9	16150	4410	46.5	16000	4590	46.2	15800	5140	45.6	15600	5860	45.1	15500	6190	44.9	15400	6850	27.9	14700	6950	26.7	13450	6940	19.6	12050	6920	17.6	11680	6880	17.1
	2	16400	3480	47.2	16200	3760	46.6	16000	4100	46.2	16000	4640	46.2	16000	5330	46.3	16000	5710	46.4	16000	6300	29.0	15500	6720	28.2	14420	6940	21.0	13110	6920	19.1	12600	6920	18.4
	7	17500	3110	50.3	16750	3310	48.2	16000	3550	46.2	16000	4000	46.2	16000	4570	46.3	16000	4940	46.4	16000	5520	29.0	16000	5930	29.1	16000	6540	23.3	16000	7550	23.4	16000	8510	23.4
	12	18520	3050	53.3	18150	3290	52.3	17770	3580	51.2	17585	3940	50.8	17400	4390	50.3	17300	4660	50.2	17210	5340	31.2	17110	5600	31.1	17020	6370	24.8	16920	7170	24.7	16780	7360	24.6
	15	19970	2990	57.4	19285	3190	55.5	18600	3430	53.6	18500	3860	53.4	18400	4420	53.2	18120	4720	52.5	17920	5320	32.5	17760	5480	32.3	17600	6420	25.6	17400	7020	25.4	17000	7110	24.9
	20	20400	2660	58.0	19770	2930	56.9	19140	3280	55.2	18975	3730	54.8	18810	4340	54.4	18610	4580	54.0	18400	4960	33.4	18210	5260	33.1	18050	6220	26.3	17750	6830	25.9	17420	7050	25.5
	25	20830	2420	58.0	20255	2690	58.0	19680	3060	56.7	19450	3420	56.2	19220	3880	55.6	19100	4280	55.4	19050	4800	34.5	18800	5110	34.2	18600	5810	27.1	18300	6350	26.7	17900	6680	26.2
	30	22110	2280	58.0	21565	2560	58.0	21020	2960	58.0	20745	3390	58.0	20470	3990	58.0	20300	4250	58.0	20010	4750	36.3	19750	5100	35.9	19520	5660	28.4	19090	6120	27.9	18650	6390	27.3
	35	23560	2190	58.0	22945	2490	58.0	22330	2900	58.0	21830	3300	58.0	21330	3860	58.0	21160	4150	58.0	20750	4620	37.6	20430	4840	37.1	20260	5350	29.5	19960	5870	29.1	19590	6220	28.7

1. Heating Capacity
   - Capacity is according to EN14511.
   - Valid for heated water range (ΔT = Leaving water temperature - Entering water temperature)
     : If LWT≤50°C, ΔT=5°C or 50°C<LWT≤60°C , ΔT=8°C or LWT>60°C, ΔT=10°C, within the minimum ~ maximum water flow rate.
2. Cooling Capacity
   - Capacity is according to EN14511.
   - Valid for Cooling water range (ΔT =Entering water temperature - Leaving water temperature)
     : ΔT=5°C, within the minimum ~ maximum water flow rate.
3. Power input : Power input is according to EN14511.
4. Peak value : Tested without defrost operation in accordance with EN14511.

※ The real capacity would be changed according to the install environment.

2. Outdoor Units

2-9. Capacity table

EHS Mono R290

2) Maximum Heating Capacity (Integrated Value)

LWT (Leaving Water Temp.), Tamb (Ambient Temp.), HC (Heating Capacity), PI (Power input), WF (Water Flow)

Model	LWT (℃)	25			30			35			40			45			50			55			60			65			70			75		
	Tamb (℃)	HC (W)	PI (W)	WF (LPM)	HC (W)	PI (W)	WF (LPM)	HC (W)	PI (W)	WF (LPM)	HC (W)	PI (W)	WF (LPM)	HC (W)	PI (W)	WF (LPM)	HC (W)	PI (W)	WF (LPM)	HC (W)	PI (W)	WF (LPM)	HC (W)	PI (W)	WF (LPM)	HC (W)	PI (W)	WF (LPM)	HC (W)	PI (W)	WF (LPM)	HC (W)	PI (W)	WF (LPM)
AE050CXYDEK/EU	-25	3,850	1,980	11.1	3,695	1,970	10.6	3,540	1,950	10.2	3,470	1,990	10.0	3,390	2,020	9.8	3,350	2,110	9.7	3,310	2,220	7.0	3,250	2,290	7.0	3,190	2,380	7.0						
	-20	4,410	1,930	12.7	4,295	2,010	12.4	4,180	2,100	12.1	4,100	2,130	11.8	4,020	2,160	11.6	3,900	2,220	11.3	3,780	2,290	7.0	3,710	2,380	7.0	3,640	2,480	7.0						
	-15	4,900	1,850	14.1	4,815	2,000	13.9	4,730	2,180	13.6	4,620	2,190	13.3	4,520	2,210	13.1	4,410	2,290	12.8	4,300	2,390	7.8	4,220	2,480	7.7	4,140	2,590	7.0	4,040	2,610	7.0			
	-10	5,310	1,730	15.3	5,110	1,840	14.7	4,910	1,980	14.2	4,880	2,090	14.1	4,850	2,220	14.0	4,840	2,320	14.0	4,830	2,420	8.8	4,820	2,590	8.8	4,800	2,770	7.0	4,680	2,900	7.0	4,560	3,040	7.0
	-7	5,380	1,550	15.5	5,165	1,650	14.9	4,950	1,770	14.3	4,950	1,900	14.3	4,950	2,040	14.3	4,950	2,210	14.4	4,940	2,410	9.0	4,920	2,590	8.9	4,900	2,800	7.1	4,900	2,980	7.2	4,890	3,190	7.2
	-2	5,460	1,390	15.7	5,205	1,440	15.0	4,950	1,500	14.3	4,950	1,700	14.3	4,950	1,960	14.3	4,950	2,100	14.4	4,950	2,270	9.0	4,950	2,410	9.0	4,950	2,570	7.2	4,870	2,760	7.1	4,770	2,970	7.0
	2	5,540	1,230	15.9	5,245	1,260	15.1	4,950	1,300	14.3	4,950	1,470	14.3	4,950	1,710	14.3	4,950	1,890	14.4	4,950	2,150	9.0	4,950	2,220	9.0	4,950	2,290	7.2	4,950	2,510	7.2	4,840	2,710	7.1
	7	6,090	980	17.5	5,545	980	16.0	5,000	980	14.4	5,000	1,130	14.4	5,000	1,320	14.5	5,000	1,450	14.5	5,000	1,610	9.1	5,000	1,740	9.1	5,000	1,890	7.3	5,000	2,100	7.3	5,000	2,360	7.3
	12	6,400	920	18.4	6,270	1,010	18.1	6,140	1,110	17.7	6,080	1,220	17.6	6,010	1,340	17.4	5,980	1,510	17.3	5,950	1,730	10.8	5,920	1,820	10.8	5,880	2,070	8.6	5,850	2,290	8.5	5,820	2,480	8.5
	15	6,890	900	19.8	6,675	980	19.2	6,460	1,080	18.6	6,390	1,200	18.5	6,330	1,360	18.3	6,250	1,510	18.1	6,180	1,710	11.2	6,100	1,790	11.1	6,080	2,010	8.9	6,060	2,220	8.8	6,040	2,500	8.8
	20	7,490	850	21.5	7,225	950	20.8	6,960	1,080	20.1	6,880	1,220	19.9	6,790	1,400	19.6	6,700	1,520	19.4	6,610	1,670	12.0	6,530	1,770	11.9	6,480	2,020	9.4	6,470	2,270	9.4	6,390	2,560	9.4
	25	8,020	810	23.1	7,800	920	22.5	7,580	1,070	21.9	7,490	1,210	21.6	7,390	1,410	21.4	7,270	1,530	21.1	7,160	1,690	13.0	7,020	1,840	12.8	6,920	2,070	10.1	6,840	2,250	10.0	6,770	2,470	9.9
	30	8,510	770	24.5	8,305	880	23.9	8,100	1,030	23.4	7,990	1,190	23.1	7,880	1,400	22.8	7,820	1,530	22.7	7,750	1,700	14.1	7,690	1,880	14.0	7,620	2,120	11.1	7,550	2,280	11.0	7,410	2,460	10.8
	35	9,080	730	26.1	8,840	840	25.5	8,600	1,010	24.8	8,410	1,150	24.3	8,220	1,360	23.8	8,150	1,490	23.6	8,080	1,660	14.7	8,020	1,840	14.6	7,950	2,050	11.6	7,850	2,200	11.5	7,690	2,350	11.3
AE080CXYDEK/EU	-25	5,700	3,020	16.4	5,475	3,000	15.8	5,250	2,980	15.1	5,135	3,030	14.8	5,020	3,080	14.5	4,960	3,220	14.4	4,900	3,380	8.9	4,810	3,500	8.7	4,720	3,630	7.0						
	-20	6,600	2,970	19.0	6,425	3,090	18.5	6,250	3,230	18.0	6,130	3,270	17.7	6,010	3,320	17.4	5,830	3,420	16.9	5,650	3,530	10.2	5,550	3,670	10.1	5,450	3,820	7.9						
	-15	7,400	2,880	21.3	7,270	3,110	20.9	7,140	3,380	20.6	6,980	3,400	20.2	6,820	3,430	19.7	6,655	3,560	19.3	6,490	3,710	11.8	6,370	3,860	11.6	6,250	4,030	9.1	6,100	4,070	8.9			
	-10	8,020	2,690	23.1	7,715	2,860	22.2	7,410	3,070	21.4	7,365	3,250	21.3	7,320	3,460	21.2	7,310	3,600	21.2	7,300	3,760	13.2	7,275	4,020	13.2	7,250	4,320	10.6	7,070	4,510	10.3	6,890	4,740	10.1
	-7	8,120	2,410	23.4	7,810	2,570	22.5	7,500	2,780	21.6	7,490	2,970	21.6	7,480	3,180	21.6	7,465	3,440	21.6	7,450	3,740	13.5	7,425	4,020	13.5	7,400	4,350	10.8	7,390	4,630	10.8	7,380	4,950	10.8
	-2	8,240	2,170	23.7	8,020	2,290	23.1	7,800	2,430	22.5	7,825	2,760	22.6	7,850	3,200	22.7	7,775	3,400	22.5	7,700	3,630	14.0	7,600	3,810	13.8	7,500	4,010	10.9	7,350	4,290	10.7	7,200	4,620	10.5
	2	8,360	1,910	24.0	8,155	2,020	23.5	7,950	2,150	22.9	7,950	2,430	23.0	7,950	2,790	23.0	7,950	3,120	23.0	7,950	3,550	14.4	7,800	3,600	14.2	7,650	3,650	11.1	7,475	3,900	10.9	7,300	4,210	10.7
	7	9,190	1,520	26.4	8,595	1,570	24.7	8,000	1,630	23.1	8,000	1,860	23.1	8,000	2,160	23.1	8,000	2,390	23.2	8,000	2,670	14.5	8,000	2,870	14.5	8,000	3,110	11.6	8,000	3,460	11.7	8,000	3,880	11.7
	12	9,850	1,470	28.3	9,650	1,600	27.8	9,450	1,770	27.2	9,350	1,930	27.0	9,250	2,130	26.8	9,200	2,390	26.7	9,150	2,730	16.6	9,100	2,890	16.5	9,050	3,280	13.2	9,000	3,630	13.1	8,950	3,930	13.1
	15	10,400	1,390	29.9	10,075	1,520	29.0	9,750	1,680	28.1	9,650	1,870	27.9	9,550	2,110	27.6	9,440	2,350	27.4	9,330	2,670	16.9	9,210	2,780	16.7	9,180	3,120	13.4	9,150	3,450	13.4	9,110	3,880	13.3
	20	11,300	1,320	32.5	10,905	1,480	31.4	10,510	1,680	30.3	10,380	1,900	30.0	10,250	2,180	29.7	10,115	2,370	29.3	9,980	2,600	18.1	9,860	2,760	17.9	9,780	3,140	14.2	9,760	3,530	14.2	9,650	3,990	14.1
	25	12,110	1,270	34.8	11,775	1,430	33.9	11,440	1,660	33.0	11,300	1,880	32.6	11,160	2,190	32.3	10,980	2,390	31.8	10,800	2,620	19.6	10,600	2,860	19.3	10,450	3,210	15.2	10,320	3,490	15.1	10,220	3,840	15.0
	30	12,850	1,200	37.0	12,535	1,370	36.1	12,220	1,610	35.2	12,060	1,840	34.8	11,900	2,180	34.4	11,800	2,380	34.2	11,700	2,640	21.2	11,600	2,930	21.1	11,500	3,290	16.7	11,400	3,540	16.6	10,800	3,690	15.8
	35	13,700	1,140	39.4	13,340	1,310	38.4	12,980	1,570	37.4	12,690	1,790	36.6	12,400	2,110	35.9	12,300	2,320	35.7	12,200	2,580	22.1	12,100	2,850	22.0	12,000	3,190	17.5	11,100	3,200	16.2	10,100	3,180	14.8
AE080CXYDGK/EU	-25	5,700	3,020	16.4	5,475	3,000	15.8	5,250	2,980	15.1	5,135	3,030	14.8	5,020	3,080	14.5	4,960	3,220	14.4	4,900	3,380	8.9	4,810	3,500	8.7	4,720	3,630	7.0						
	-20	6,600	2,970	19.0	6,425	3,090	18.5	6,250	3,230	18.0	6,130	3,270	17.7	6,010	3,320	17.4	5,830	3,420	16.9	5,650	3,530	10.2	5,550	3,670	10.1	5,450	3,820	7.9						
	-15	7,400	2,880	21.3	7,270	3,110	20.9	7,140	3,380	20.6	6,980	3,400	20.2	6,820	3,430	19.7	6,655	3,560	19.3	6,490	3,710	11.8	6,370	3,860	11.6	6,250	4,030	9.1	6,100	4,070	8.9			
	-10	8,020	2,690	23.1	7,715	2,860	22.2	7,410	3,070	21.4	7,365	3,250	21.3	7,320	3,460	21.2	7,310	3,600	21.2	7,300	3,760	13.2	7,275	4,020	13.2	7,250	4,320	10.6	7,070	4,580	10.3	6,890	4,890	10.1
	-7	8,120	2,410	23.4	7,810	2,570	22.5	7,500	2,780	21.6	7,490	2,970	21.6	7,480	3,180	21.6	7,465	3,440	21.6	7,450	3,740	13.5	7,425	4,020	13.5	7,400	4,350	10.8	7,390	4,630	10.8	7,380	4,950	10.8
	-2	8,240	2,170	23.7	8,020	2,290	23.1	7,800	2,430	22.5	7,825	2,760	22.6	7,850	3,200	22.7	7,775	3,400	22.5	7,700	3,630	14.0	7,600	3,810	13.8	7,500	4,010	10.9	7,350	4,290	10.7	7,200	4,620	10.5
	2	8,360	1,910	24.0	8,155	2,020	23.5	7,950	2,150	22.9	7,950	2,430	23.0	7,950	2,790	23.0	7,950	3,120	23.0	7,950	3,550	14.4	7,800	3,600	14.2	7,650	3,650	11.1	7,475	3,900	10.9	7,300	4,210	10.7
	7	9,190	1,520	26.4	8,595	1,570	24.7	8,000	1,630	23.1	8,000	1,860	23.1	8,000	2,160	23.1	8,000	2,390	23.2	8,000	2,670	14.5	8,000	2,870	14.5	8,000	3,110	11.6	8,000	3,460	11.7	8,000	3,880	11.7
	12	9,850	1,470	28.3	9,650	1,600	27.8	9,450	1,770	27.2	9,350	1,930	27.0	9,250	2,130	26.8	9,200	2,390	26.7	9,150	2,730	16.6	9,100	2,890	16.5	9,050	3,280	13.2	9,000	3,630	13.1	8,950	3,930	13.1
	15	10,400	1,390	29.9	10,075	1,520	29.0	9,750	1,680	28.1	9,650	1,870	27.9	9,550	2,110	27.6	9,440	2,350	27.4	9,330	2,670	16.9	9,210	2,780	16.7	9,180	3,120	13.4	9,150	3,450	13.4	9,110	3,880	13.3
	20	11,300	1,320	32.5	10,905	1,480	31.4	10,510	1,680	30.3	10,380	1,900	30.0	10,250	2,180	29.7	10,115	2,370	29.3	9,980	2,600	18.1	9,860	2,760	17.9	9,780	3,140	14.2	9,760	3,530	14.2	9,650	3,990	14.1
	25	12,110	1,270	34.8	11,775	1,430	33.9	11,440	1,660	33.0	11,300	1,880	32.6	11,160	2,190	32.3	10,980	2,390	31.8	10,800	2,620	19.6	10,600	2,860	19.3	10,450	3,210	15.2	10,320	3,490	15.1	10,220	3,840	15.0
	30	12,850	1,200	37.0	12,535	1,370	36.1	12,220	1,610	35.2	12,060	1,840	34.8	11,900	2,180	34.4	11,800	2,380	34.2	11,700	2,640	21.2	11,600	2,930	21.1	11,500	3,290	16.7	11,400	3,540	16.6	11,300	3,880	16.5
	35	13,700	1,140	39.4	13,340	1,310	38.4	12,980	1,570	37.4	12,690	1,790	36.6	12,400	2,110	35.9	12,300	2,320	35.7	12,200	2,580	22.1	12,100	2,850	22.0	12,000	3,190	17.5	11,100	3,260	16.2	11,820	3,880	17.3
AE120CXYDEK/EU	-25	9,800	4,830	28.2	9,650	4,990	27.8	9,500	5,160	27.4	9,400	5,450	27.1	9,300	5,780	26.9	9,150	5,950	26.5	9,000	6,200	16.3	8,850	6,420	16.1	8,800	6,720	12.8						
	-20	10,500	4,550	30.2	10,400	4,790	29.9	10,300	5,070	29.7	10,250	5,360	29.6	10,150	5,660	29.4	10,100	5,940	29.3	10,000	6,250	18.1	9,850	6,510	17.9	9,760	6,920	14.2						
	-15	11,700	4,460	33.6	11,420	4,780	32.9	11,150	5,180	32.1	11,125	5,400	32.1	11,075	5,620	32.0	11,050	5,900	32.0	11,000	6,220	19.9	10,930	6,580	19.9	10,680	6,960	15.6	9,800	6,710	14.3			
	-10	12,030	4,130	34.6	11,570	4,380	33.3	11,120	4,540	32.1	11,050	5,030	31.9	10,980	5,290	31.8	10,970	5,460	31.8	10,950	5,760	19.9	10,910	6,150	19.8	10,870	6,590	15.8	10,660	6,940	15.6	9,940	6,900	14.5
	-7	12,180	3,730	35.0	11,720	3,860	33.7	11,450	4,160	33.0	11,240	4,590	32.5	11,220	4,820	32.5	11,200	4,980	32.5	11,180	5,670	20.3	11,140	6,160	20.2	11,100	6,660	16.2	10,900	6,900	15.9	10,050	6,930	14.7
	-2	12,360	3,350	35.5	12,030	3,430	34.6	11,900	3,710	34.3	11,820	4,310	34.1	11,780	4,900	34.1	11,660	5,000	33.8	11,550	5,340	20.9	11,400	5,710	20.7	11,250	6,130	16.4	11,030	6,500	16.1	10,200	6,610	14.9
	2	12,540	2,950	36.1	12,230	3,090	35.2	11,900	3,310	34.3	11,900	3,750	34.4	11,900	4,410	34.4	11,900	4,590	34.5	11,900	5,020	21.6	11,700	5,340	21.3	11,480	5,590	16.7	11,350	5,990	16.6	11,200	6,590	16.4
	7	13,790	2,180	39.7	12,890	2,360	37.1	12,000	2,500	34.6	12,000	2,790	34.7	12,000	3,240	34.7	12,000	3,550	34.8	12,000	4,000	21.8	12,000	4,270	21.8	12,000	4,710	17.5	12,000	5,290	17.5	12,000	5,880	17.6
	12	14,780	2,190	42.5	14,480	2,420	41.7	14,180	2,660	40.9	14,030	2,900	40.5	13,880	3,260	40.2	13,800	3,570	40.0	13,730	4,090	24.9	13,650	4,330	24.8	13,580	4,880	19.8	13,500	5,480	19.7	13,430	5,860	19.7
	15	15,600	2,100	44.9	15,110	2,260	43.5	14,630	2,510	42.2	14,480	2,780	41.8	14,330	3,250	41.5	14,160	3,540	41.1	14,000	3,990	25.4	13,820	4,140	25.1	13,770	4,650	20.1	13,730	5,130	20.0	13,670	5,820	20.0
	20	16,950	1,990	48.7	16,360	2,230	47.1	15,770	2,510	45.5	15,570	2,840	45.0	15,380	3,300	44.5	15,170	3,590	44.0	14,970	3,870	27.1	14,790	4,140	26.9	14,670	4,720	21.4	14,640	5,290	21.4	14,620	5,850	21.4
	25	18,170	1,900	52.3	17,660	2,150	50.8	17,160	2,480	49.5	16,950	2,840	49.0	16,740	3,210	48.4	16,470	3,540	47.7	16,200	3,920	29.4	15,900	4,250	28.9	15,680	4,870	22.8	15,480	5,210	22.6	15,000	5,470	21.9
	30	19,280	1,790	55.4	18,800	2,040	54.1	18,330	2,400	52.9	18,090	2,770	52.2	17,850	3,230	51.6	17,700	3,560	51.3	17,550	4,000	31.8	17,400	4,350	31.6	17,250	4,920	25.1	15,900	5,050	23.2	14,900	5,050	21.8
	35	20,550	1,720	58.0	20,010	1,950	57.6	19,470	2,350	56.1	19,040	2,710	55.0	18,600	3,130	53.8	18,450	3,480	53.5	18,300	3,890	33.2	18,150	4,260	33.0	17,250	4,620	25.1	15,900	4,600	23.2	14,750	4,600	21.6
AE120CXYDGK/EU	-25	9,800	4,830	28.2	9,650	4,990	27.8	9,500	5,160	27.4	9,450	5,480	27.3	9,400	5,840	27.2	9,380	6,100	27.2	9,350	6,440	17.0	9,300	6,890	16.9	9,250	7,400	13.5						
	-20	11,000	4,760	31.6	10,900	5,020	31.4	10,800	5,320	31.1	10,750	5,630	31.0	10,650	5,940	30.8	10,550	6,210	30.6	10,350	6,470	18.8	10,250	6,770	18.6	10,150	7,360	14.8						
	-15	11,700	4,460	33.6	11,420	4,780	32.9	11,150	5,180	32.1	11,125	5,400	32.1	11,075	5,620	32.0	11,050	5,900	32.0	11,000	6,220	19.9	10,930	6,580	19.9	10,870	7,200	15.8	10,400	7,270	15.2			
	-10	12,030	4,130	34.6	11,570	4,380	33.3	11,120	4,540	32.1	11,050	5,030	31.9	10,980	5,290	31.8	10,970	5,460	31.8	10,950	5,760	19.9	10,910	6,150	19.8	10,870	6,590	15.8	10,800	7,250	15.8	10,450	7,410	15.3
	-7	12,180	3,730	35.0	11,720	3,860	33.7	11,450	4,160	33.0	11,240	4,590	32.5	11,220	4,820	32.5	11,200	4,980	32.5	11,180	5,670	20.3	11,140	6,160	20.2	11,100	6,660	16.2	10,950	7,020	16.0	10,700	7,540	15.7
	-2	12,360	3,350	35.5	12,030	3,430	34.6	11,900	3,710	34.3	11,820	4,310	34.1	11,780	4,900	34.1	11,660	5,000	33.8	11,550	5,340	20.9	11,400	5,710	20.7	11,250	6,130	16.4	11,030	6,500	16.1	10,900	7,220	16.0
	2	12,540	2,950	36.1	12,230	3,090	35.2	11,900	3,310	34.3	11,900	3,750	34.4	11,900	4,410	34.4	11,900	4,590	34.5	11,900	5,020	21.6	11,700	5,340	21.3	11,480	5,590	16.7	11,350	5,990	16.6	11,200	6,590	16.4
	7	13,790	2,180	39.7	12,890	2,360	37.1	12,000	2,500	34.6	12,000	2,790	34.7	12,000	3,240	34.7	12,000	3,550	34.8	12,000	4,000	21.8	12,000	4,270	21.8	12,000	4,710	17.5	12,000	5,290	17.5	12,000	5,880	17.6
	12	14,780	2,190	42.5	14,480	2,420	41.7	14,180	2,660	40.9	14,030	2,900	40.5	13,880	3,260	40.2	13,800	3,570	40.0	13,730	4,090	24.9	13,650	4,330	24.8	13,580	4,880	19.8	13,500	5,480	19.7	13,430	5,860	19.7
	15	15,600	2,100	44.9	15,110	2,260	43.5	14,630	2,510	42.2	14,480	2,780	41.8	14,330	3,250	41.5	14,160	3,540	41.1	14,000	3,990	25.4	13,820	4,140	25.1	13,770	4,650	20.1	13,730	5,130	20.0	13,670	5,820	20.0
	20	16,950	1,990	48.7	16,360	2,230	47.1	15,770	2,510	45.5	15,570	2,840	45.0	15,380	3,300	44.5	15,170	3,590	44.0	14,970	3,870	27.1	14,790	4,140	26.9	14,670	4,720	21.4	14,640	5,290	21.4	14,620	5,850	21.4
	25	18,170	1,900	52.3	17,660	2,150	50.8	17,160	2,480	49.5	16,950	2,840	49.0	16,740	3,210	48.4	16,470	3,540	47.7	16,200	3,920	29.4	15,900	4,250	28.9	15,680	4,870	22.8	15,480	5,210	22.6	15,330	5,590	22.4
	30	19,280	1,790	55.4	18,800	2,040	54.1	18,330	2,400	52.9	18,090	2,770	52.2	17,850	3,230	51.6	17,700	3,560	51.3	17,550	4,000	31.8	17,400	4,350	31.6	17,250	4,920	25.1	16,850	5,190	24.6	16,390	5,560	24.0
	35	20,550	1,720	58.0	20,010	1,950	57.6	19,470	2,350	56.1	19,040	2,710	55.0	18,600	3,130	53.8	18,450	3,480	53.5	18,300	3,890	33.2	18,150	4,260	33.0	17,950	4,810	26.1	17,750	5,100	25.9	17,560	5,480	25.7

2. Outdoor Units

2-9. Capacity table

EHS Mono R290

2) Maximum Heating Capacity (Integrated Value)

LWT (Leaving Water Temp.), Tamb (Ambient Temp.), HC (Heating Capacity), PI (Power input), WF (Water Flow)

Model	LWT (°C)	25			30			35			40			45			50			55			60			65			70			75		
	Tamb (°C)	HC (W)	PI (W)	WF (LPM)	HC (W)	PI (W)	WF (LPM)	HC (W)	PI (W)	WF (LPM)	HC (W)	PI (W)	WF (LPM)	HC (W)	PI (W)	WF (LPM)	HC (W)	PI (W)	WF (LPM)	HC (W)	PI (W)	WF (LPM)	HC (W)	PI (W)	WF (LPM)	HC (W)	PI (W)	WF (LPM)	HC (W)	PI (W)	WF (LPM)	HC (W)	PI (W)	WF (LPM)
AE160CXYDEK/EU	-25	9,800	4,830	28.2	10,650	5,630	30.7	11,500	6,570	33.2	11,050	6,680	31.9	10,600	6,790	30.7	10,370	6,950	30.1	9,800	6,950	17.8	9,390	6,950	17.1	8,800	6,720	12.8						
	-20	13,300	6,240	38.3	13,135	6,570	37.8	12,970	6,940	37.4	12,400	6,940	35.8	11,830	6,950	34.2	11,460	6,950	33.2	11,100	6,940	20.1	10,190	6,940	18.5	9,760	6,920	14.2						
	-15	14,980	6,350	43.1	14,370	6,620	41.4	13,760	6,950	39.7	13,390	6,950	38.7	13,010	6,950	37.6	12,630	6,950	36.6	11,880	6,950	21.5	11,070	6,950	20.1	10,680	6,960	15.6	9,800	6,710	14.3			
	-10	15,000	5,880	43.1	14,380	6,030	41.4	13,750	6,190	39.6	13,400	6,490	38.7	13,050	6,830	37.8	12,650	6,840	36.7	12,200	6,850	22.1	11,770	6,770	21.4	11,100	6,770	16.2	10,660	6,940	15.6	9,940	6,900	14.5
	-7	14,800	5,150	42.6	14,400	5,360	41.5	14,000	5,600	40.4	13,960	6,080	40.3	13,910	6,640	40.2	13,800	6,830	40.0	12,820	6,850	23.2	12,000	6,770	21.8	11,140	6,750	16.2	10,900	6,900	15.9	10,050	6,930	14.7
	-2	14,500	4,460	41.7	14,630	4,740	42.1	14,760	5,050	42.6	14,690	5,730	42.4	14,610	6,610	42.3	14,300	6,590	41.5	13,400	6,450	24.3	12,840	6,770	23.3	12,140	6,750	17.7	11,300	6,770	16.5	10,300	6,780	15.1
	2	14,200	3,790	40.8	14,850	4,210	42.8	15,500	4,700	44.7	15,250	5,210	44.0	15,000	5,880	43.4	14,600	6,120	42.3	14,000	6,060	25.4	13,930	6,770	25.3	13,450	6,750	19.6	12,300	6,760	18.0	11,500	6,760	16.8
	7	17,500	3,110	50.3	16,750	3,310	48.2	16,000	3,550	46.2	16,000	4,000	46.2	16,000	4,570	46.3	16,000	4,940	46.4	16,000	5,520	29.0	16,000	5,930	29.1	16,000	6,540	23.3	14,890	6,910	21.7	13,400	6,910	19.6
	12	18,520	3,050	53.3	18,150	3,290	52.3	17,770	3,580	51.2	17,585	3,940	50.8	17,400	4,390	50.3	17,300	4,660	50.2	17,210	5,340	31.2	17,110	5,600	31.1	17,020	6,370	24.8	15,900	6,680	23.2	15,400	6,700	22.5
	15	19,970	2,990	57.4	19,285	3,190	55.5	18,600	3,430	53.6	18,500	3,860	53.4	18,400	4,420	53.2	18,120	4,720	52.5	17,920	5,320	32.5	17,760	5,480	32.3	17,500	6,360	25.5	15,900	6,360	23.2	15,400	6,360	22.5
	20	20,400	2,660	58.0	19,770	2,930	56.9	19,140	3,280	55.2	18,975	3,730	54.8	18,810	4,340	54.4	18,610	4,580	54.0	18,400	4,960	33.4	18,210	5,260	33.1	17,600	6,050	25.6	15,900	6,050	23.2	15,100	6,040	22.1
	25	20,830	2,420	58.0	20,255	2,690	58.0	19,680	3,060	56.7	19,450	3,420	56.2	19,220	3,880	55.6	19,100	4,280	55.4	19,050	4,800	34.5	18,800	5,110	34.2	17,600	5,480	25.6	15,900	5,480	23.2	15,000	5,470	21.9
	30	22,110	2,280	58.0	21,565	2,560	58.0	21,020	2,960	58.0	20,745	3,390	58.0	20,470	3,990	58.0	20,300	4,250	58.0	20,010	4,750	36.3	19,600	5,050	35.6	17,600	5,050	25.6	15,900	5,050	23.2	14,900	5,050	21.8
	35	23,560	2,190	58.0	22,945	2,490	58.0	22,330	2,900	58.0	21,830	3,300	58.0	21,330	3,860	58.0	21,160	4,150	58.0	20,500	4,540	37.2	19,600	4,600	35.6	17,600	4,600	25.6	15,900	4,600	23.2	14,750	4,600	21.6
AE160CXYDGK/EU	-25	9,800	4,830	28.2	10,650	5,630	30.7	11,500	6,570	33.2	11,400	7,000	32.9	11,300	7,480	32.7	11,200	7,800	32.5	11,000	8,270	19.9	10,800	8,570	19.6	10,600	8,880	15.4						
	-20	13,300	6,240	38.3	13,135	6,570	37.8	12,970	6,940	37.4	12,500	7,030	36.1	12,400	7,460	35.9	12,300	7,730	35.7	12,100	7,900	21.9	11,700	8,540	21.3	11,500	8,850	16.7						
	-15	14,980	6,350	43.1	14,370	6,620	41.4	13,760	6,950	39.7	13,450	7,000	38.8	13,100	7,020	37.9	12,850	7,130	37.3	12,560	7,550	22.8	12,260	8,100	22.3	11,860	8,140	17.3	10,800	7,990	15.8			
	-10	15,000	5,880	43.1	14,380	6,030	41.4	13,750	6,190	39.6	13,400	6,490	38.7	13,050	6,830	37.8	12,650	6,840	36.7	12,200	6,850	22.1	11,820	7,250	21.5	11,720	7,560	17.1	11,000	7,490	16.1	10,500	7,760	15.4
	-7	14,800	5,150	42.6	14,400	5,360	41.5	14,000	5,600	40.4	13,960	6,080	40.3	13,910	6,640	40.2	13,800	6,830	40.0	12,820	6,850	23.2	12,030	7,120	21.9	11,800	7,420	17.2	11,030	7,500	16.1	10,340	7,600	15.1
	-2	14,500	4,460	41.7	14,630	4,740	42.1	14,760	5,050	42.6	14,690	5,730	42.4	14,610	6,610	42.3	14,300	6,590	41.5	13,400	6,450	24.3	12,650	6,800	23.0	12,060	6,850	17.6	11,330	6,950	16.5	10,500	7,050	15.4
	2	14,200	3,790	40.8	14,850	4,210	42.8	15,500	4,700	44.7	15,250	5,210	44.0	15,000	5,880	43.4	14,600	6,120	42.3	14,000	6,060	25.4	13,610	6,770	24.7	13,290	6,780	19.4	12,240	6,800	17.9	11,510	6,850	16.8
	7	17,500	3,110	50.3	16,750	3,310	48.2	16,000	3,550	46.2	16,000	4,000	46.2	16,000	4,570	46.3	16,000	4,940	46.4	16,000	5,520	29.0	16,000	5,930	29.1	16,000	6,540	23.3	16,000	7,550	23.4	16,000	8,510	23.4
	12	18,520	3,050	53.3	18,150	3,290	52.3	17,770	3,580	51.2	17,585	3,940	50.8	17,400	4,390	50.3	17,300	4,660	50.2	17,210	5,340	31.2	17,110	5,600	31.1	17,020	6,370	24.8	16,920	7,170	24.7	16,780	7,360	24.6
	15	19,970	2,990	57.4	19,285	3,190	55.5	18,600	3,430	53.6	18,500	3,860	53.4	18,400	4,420	53.2	18,120	4,720	52.5	17,920	5,320	32.5	17,760	5,480	32.3	17,600	6,420	25.6	17,400	7,020	25.4	17,000	7,110	24.9
	20	20,400	2,660	58.0	19,770	2,930	56.9	19,140	3,280	55.2	18,975	3,730	54.8	18,810	4,340	54.4	18,610	4,580	54.0	18,400	4,960	33.4	18,210	5,260	33.1	18,050	6,220	26.3	17,750	6,830	25.9	17,420	7,050	25.5
	25	20,830	2,420	58.0	20,255	2,690	58.0	19,680	3,060	56.7	19,450	3,420	56.2	19,220	3,880	55.6	19,100	4,280	55.4	19,050	4,800	34.5	18,800	5,110	34.2	18,600	5,810	27.1	18,300	6,350	26.7	17,900	6,680	26.2
	30	22,110	2,280	58.0	21,565	2,560	58.0	21,020	2,960	58.0	20,745	3,390	58.0	20,470	3,990	58.0	20,300	4,250	58.0	20,010	4,750	36.3	19,750	5,100	35.9	19,520	5,660	28.4	19,090	6,120	27.9	18,650	6,390	27.3
	35	23,560	2,190	58.0	22,945	2,490	58.0	22,330	2,900	58.0	21,830	3,300	58.0	21,330	3,860	58.0	21,160	4,150	58.0	20,750	4,620	37.6	20,430	4,840	37.1	20,260	5,350	29.5	19,960	5,870	29.1	19,590	6,220	28.7

1. Heating capacity
 - Capacity is according to EN14511.
 - Valid for heated water range (ΔT = Leaving water temperature - Entering water temperature)
  : If LWT≤50°C, ΔT=5°C or 50°C<LWT≤60°C , ΔT=8°C or LWT>60°C, ΔT=10°C, within the minimum ~ maximum water flow rate.
2. Cooling capacity
 - Capacity is according to EN14511.
 - Valid for Cooling water range (ΔT =Entering water temperature - Leaving water temperature)
  : ΔT=5°C, within the minimum ~ maximum water flow rate.
3. Power input : Power input is according to EN14511.
4. Peak value : Tested without defrost operation in accordance with EN14511.
※ The real capacity would be changed according to the install environment.

2. Outdoor Units

2-9. Capacity table

EHS Mono R290

3) Cooling Capacity

LWT (Leaving Water Temp.), Tamb (Ambient Temp.), CC (Cooling Capacity), PI (Power input), WF (Water Flow)

Model	LWT(℃)	7			10			13			15			18			25		
	Tamb(℃)	CC (W)	PI (W)	WF(LPM)	CC (W)	PI (W)	WF(LPM)	CC (W)	PI (W)	WF(LPM)	CC (W)	PI (W)	WF(LPM)	CC (W)	PI (W)	WF(LPM)	CC (W)	PI (W)	WF(LPM)
AE050CXYDEK/EU	10	4,485	670	12.9	4,577	670	13.2	4,959	720	14.3	5,244	730	15.1	5,750	730	16.5	6,327	690	18.2
	20	4,290	790	12.3	4,415	800	12.7	4,785	750	13.8	5,060	780	14.6	5,550	830	16.0	6,105	860	17.6
	30	4,095	1,040	11.8	4,253	1,030	12.2	4,611	1,090	13.3	4,876	1,100	14.0	5,350	1,020	15.4	5,883	1,020	17.0
	35	3,900	1,280	11.2	4,050	1,300	11.6	4,350	1,200	12.5	4,600	1,220	13.2	5,000	1,280	14.4	5,550	1,080	16.0
	46	3,650	1,870	10.5	3,850	1,860	11.1	4,120	1,830	11.8	4,420	1,870	12.7	4,800	1,930	13.8	5,246	1,900	15.1
AE080CXYDEK/EU	10	6,560	990	18.8	7,010	1,030	20.1	7,870	1,140	22.6	8,440	1,170	24.3	9,200	1,160	26.5	10,260	1,120	29.6
	20	6,270	1,150	18.0	6,760	1,220	19.4	7,590	1,220	21.8	8,140	1,250	23.4	8,880	1,320	25.6	9,900	1,390	28.5
	30	5,990	1,520	17.2	6,510	1,580	18.7	7,310	1,730	21.0	7,840	1,780	22.5	8,560	1,640	24.6	9,540	1,650	27.5
	35	5,700	1,900	16.4	6,200	1,990	17.8	6,900	1,900	19.8	7,400	1,970	21.3	8,000	2,050	23.1	9,000	1,750	26.0
	46	5,250	2,690	15.1	5,820	2,810	16.7	6,390	2,840	18.4	6,900	2,920	19.8	7,750	3,110	22.3	8,320	3,020	24.0
AE080CXYDGK/EU	10	6,560	990	18.8	7,010	1,030	20.1	7,870	1,140	22.6	8,440	1,170	24.3	9,200	1,160	26.5	10,260	1,120	29.6
	20	6,270	1,150	18.0	6,760	1,220	19.4	7,590	1,220	21.8	8,140	1,250	23.4	8,880	1,320	25.6	9,900	1,390	28.5
	30	5,990	1,520	17.2	6,510	1,580	18.7	7,310	1,730	21.0	7,840	1,780	22.5	8,560	1,640	24.6	9,540	1,650	27.5
	35	5,700	1,900	16.4	6,200	1,990	17.8	6,900	1,900	19.8	7,400	1,970	21.3	8,000	2,050	23.1	9,000	1,750	26.0
	46	5,250	2,690	15.1	5,820	2,810	16.7	6,390	2,840	18.4	6,900	2,920	19.8	7,750	3,110	22.3	8,320	3,020	24.0
AE120CXYDEK/EU	10	10,350	1,590	29.7	10,740	1,600	30.9	11,630	1,650	33.4	12,430	1,690	35.7	13,800	1,700	39.7	15,050	1,470	43.4
	20	9,900	1,850	28.4	10,360	1,890	29.8	11,220	1,780	32.3	11,990	1,800	34.5	13,320	1,930	38.3	14,520	1,770	41.9
	30	9,450	2,440	27.1	9,980	2,450	28.7	10,810	2,490	31.1	11,550	2,550	33.2	12,840	2,400	37.0	13,990	2,030	40.3
	35	9,000	3,100	25.9	9,500	3,070	27.3	10,200	2,700	29.3	10,900	2,830	31.3	12,000	3,000	34.6	13,200	2,230	38.1
	46	7,500	3,920	21.5	8,150	3,970	23.4	9,050	3,920	26.0	9,650	3,970	27.8	10,050	3,940	28.9	12,200	3,970	35.2
AE120CXYDGK/EU	10	10,350	1,590	29.7	10,740	1,600	30.9	11,630	1,650	33.4	12,430	1,690	35.7	13,800	1,700	39.7	15,050	1,470	43.4
	20	9,900	1,850	28.4	10,360	1,890	29.8	11,220	1,780	32.3	11,990	1,800	34.5	13,320	1,930	38.3	14,520	1,770	41.9
	30	9,450	2,440	27.1	9,980	2,450	28.7	10,810	2,490	31.1	11,550	2,550	33.2	12,840	2,400	37.0	13,990	2,030	40.3
	35	9,000	3,100	25.9	9,500	3,070	27.3	10,200	2,700	29.3	10,900	2,830	31.3	12,000	3,000	34.6	13,200	2,230	38.1
	46	8,550	4,620	24.6	9,030	4,400	25.9	9,690	4,200	27.9	10,360	4,260	29.8	11,400	4,470	32.8	12,540	4,080	36.2
AE160CXYDEK/EU	10	11,960	1,910	34.4	12,430	1,930	35.7	13,510	2,060	38.8	14,480	1,990	41.6	16,100	2,090	46.3	17,670	1,820	50.9
	20	11,440	2,190	32.9	11,990	2,220	34.5	13,040	2,210	37.5	13,970	2,200	40.2	15,540	2,370	44.7	17,050	2,190	49.2
	30	10,920	2,880	31.4	11,550	3,000	33.2	12,560	3,110	36.1	13,460	2,960	38.7	14,980	2,940	43.1	16,430	2,510	47.4
	35	10,400	3,590	29.9	11,000	3,590	31.6	11,850	3,350	34.1	12,700	3,480	36.5	14,000	3,680	40.4	15,500	2,750	44.7
	46	7,520	3,940	21.6	8,170	3,990	23.5	9,080	3,940	26.1	9,680	3,970	27.8	10,100	3,960	29.1	12,270	3,980	35.4
AE160CXYDGK/EU	10	11,960	1,910	34.4	12,430	1,930	35.7	13,510	2,060	38.8	14,480	1,990	41.6	16,100	2,090	46.3	17,670	1,820	50.9
	20	11,440	2,190	32.9	11,990	2,220	34.5	13,040	2,210	37.5	13,970	2,200	40.2	15,540	2,370	44.7	17,050	2,190	49.2
	30	10,920	2,880	31.4	11,550	3,000	33.2	12,560	3,110	36.1	13,460	2,960	38.7	14,980	2,940	43.1	16,430	2,510	47.4
	35	10,400	3,590	29.9	11,000	3,590	31.6	11,850	3,350	34.1	12,700	3,480	36.5	14,000	3,680	40.4	15,500	2,750	44.7
	46	9,880	5,340	28.4	10,450	5,150	30.0	11,260	5,000	32.4	12,070	5,070	34.7	13,300	5,340	38.3	14,730	4,990	42.5

1. Heating capacity
 - Capacity is according to EN14511.
 - Valid for heated water range (ΔT = Leaving water temperature - Entering water temperature)
  : If LWT≤50°C, ΔT=5°C or 50°C<LWT≤60°C , ΔT=8°C or LWT>60°C, ΔT=10°C, within the minimum ~ maximum water flow rate.
2. Cooling capacity
 - Capacity is according to EN14511.
 - Valid for Cooling water range (ΔT =Entering water temperature - Leaving water temperature)
  : ΔT=5°C, within the minimum ~ maximum water flow rate.
3. Power input : Power input is according to EN14511.
4. Peak value : Tested without defrost operation in accordance with EN14511.
※ The real capacity would be changed according to the install environment.

2. Outdoor Units

2-9. Capacity table

EHS Mono HT Quiet

1) Maximum Heating Capacity (Peak Value)

LWT (Leaving Water Temp.), Tamb (Ambient Temp.), HC (Heating Capacity), PI (Power input), WF (Water Flow)

	LWT (°C)	25			30			35			40			45			50			55			60			65			70		
	Tamb (°C)	HC (kW)	PI (kW)	WF (LPM)	HC (kW)	PI (kW)	WF (LPM)	HC (kW)	PI (kW)	WF (LPM)	HC (kW)	PI (kW)	WF (LPM)	HC (kW)	PI (kW)	WF (LPM)	HC (kW)	PI (kW)	WF (LPM)	HC (kW)	PI (kW)	WF (LPM)	HC (kW)	PI (kW)	WF (LPM)	HC (kW)	PI (kW)	WF (LPM)	HC (kW)	PI (kW)	WF (LPM)
AE080BXYDEG/EU	-30	5.82	2.53	16.7	5.89	2.80	17.0	5.96	3.14	17.2	6.22	3.48	18.0	6.48	3.88	18.7	6.74	4.19	19.5	6.92	4.43	12.5	6.94	4.69	12.6						
	-25	8.00	3.47	23.0	8.00	3.63	23.0	8.00	3.79	23.1	8.00	4.03	23.1	8.00	4.28	23.1	8.00	4.49	23.2	8.00	4.85	14.5	8.40	5.17	15.3	7.95	5.28	11.6			
	-20	8.00	3.05	23.0	8.00	3.20	23.0	8.00	3.39	23.1	8.00	3.59	23.1	8.00	3.84	23.1	8.00	4.09	23.2	8.00	4.31	14.5	9.11	5.13	16.6	8.75	5.26	12.7			
	-15	8.00	2.61	23.0	8.00	2.86	23.0	8.00	3.14	23.1	8.00	3.36	23.1	8.00	3.61	23.1	8.00	3.84	23.2	8.00	4.01	14.5	9.35	4.87	17.0	9.54	5.24	13.9	8.00	4.85	11.7
	-10	8.00	2.28	23.0	8.00	2.47	23.0	8.00	2.72	23.1	8.00	2.88	23.1	8.00	3.06	23.1	8.00	3.33	23.2	8.00	3.56	14.5	9.65	4.48	17.5	10.01	4.96	14.6	10.21	5.27	14.9
	-7	8.00	2.10	23.0	8.00	2.34	23.0	8.00	2.46	23.1	8.00	2.64	23.1	8.00	2.87	23.1	8.00	3.10	23.2	8.00	3.26	14.5	10.19	4.39	18.5	10.43	4.81	15.2	10.79	5.18	15.7
	-2	8.00	1.95	23.0	8.00	2.05	23.0	8.00	2.10	23.1	8.00	2.32	23.1	8.00	2.57	23.1	8.00	2.69	23.2	8.00	2.79	14.5	10.36	3.92	18.8	10.80	4.62	15.7	11.04	4.86	16.1
	2	8.00	1.62	23.0	8.00	1.72	23.0	8.00	1.82	23.1	8.00	2.01	23.1	8.00	2.26	23.1	8.00	2.44	23.2	8.00	2.58	14.5	10.11	3.57	18.4	10.63	4.21	15.5	11.01	4.75	16.1
	7	8.00	1.29	23.0	8.00	1.43	23.0	8.00	1.60	23.1	8.00	1.80	23.1	8.00	2.05	23.1	8.00	2.23	23.2	8.00	2.50	14.5	9.11	3.16	16.6	9.66	3.79	14.1	10.03	4.29	14.6
	12	8.92	1.18	25.7	8.95	1.35	25.8	8.98	1.57	25.9	9.02	1.80	26.1	9.05	2.11	26.2	9.08	2.38	26.3	9.11	2.71	16.5	9.57	3.11	17.4	10.08	3.72	14.7	10.43	4.25	15.2
	15	9.10	1.09	26.2	9.14	1.26	26.3	9.20	1.49	26.5	9.26	1.71	26.7	9.30	2.01	26.9	9.36	2.29	27.1	9.42	2.62	17.1	9.85	3.01	17.9	10.33	3.59	15.0	10.67	4.10	15.6
	20	9.39	0.99	27.0	9.48	1.14	27.3	9.57	1.34	27.6	9.66	1.50	27.9	9.74	1.77	28.2	9.83	2.08	28.5	9.91	2.46	18.0	10.31	2.82	18.7	10.76	3.38	15.7	11.08	4.04	16.2
	25	9.69	0.93	27.9	9.82	1.07	28.3	9.93	1.24	28.6	10.06	1.42	29.1	10.17	1.66	29.4	10.30	1.96	29.9	10.41	2.32	18.9	10.78	2.67	19.6	11.18	3.20	16.3	11.48	3.99	16.8
	30	9.99	0.93	28.7	10.15	1.06	29.2	10.30	1.23	29.7	10.45	1.37	30.2	10.60	1.55	30.7	10.76	1.83	31.2	10.91	2.17	19.8	11.24	2.49	20.4	11.59	3.01	16.9	11.88	3.79	17.3
	35	10.29	0.92	29.6	10.48	1.03	30.2	10.66	1.17	30.7	10.75	1.29	31.0	10.99	1.46	31.8	11.22	1.73	32.5	11.41	2.04	20.7	11.70	2.35	21.3	12.02	2.85	17.5	12.28	3.62	17.9
	43	10.8	0.92	31.0	11	1.01	31.7	11.3	1.11	32.4	11.5	1.24	33.2	11.7	1.41	33.9	12	1.65	34.7	12.2	1.93	22.1	12.5	2.23	22.6	12.7	2.72	18.5	12.9	3.33	18.9
AE120BXYDEG/EU	LWT (°C)	25			30			35			40			45			50			55			60			65			70		
	Tamb (°C)	HC (kW)	PI (kW)	WF (LPM)	HC (kW)	PI (kW)	WF (LPM)	HC (kW)	PI (kW)	WF (LPM)	HC (kW)	PI (kW)	WF (LPM)	HC (kW)	PI (kW)	WF (LPM)	HC (kW)	PI (kW)	WF (LPM)	HC (kW)	PI (kW)	WF (LPM)	HC (kW)	PI (kW)	WF (LPM)	HC (kW)	PI (kW)	WF (LPM)	HC (kW)	PI (kW)	WF (LPM)
	-30	7.76	3.45	22.3	7.85	3.83	22.6	7.95	4.30	22.9	8.29	4.78	23.9	8.64	5.30	25.0	8.99	5.74	26.1	9.23	6.07	16.7	9.26	6.41	16.8						
	-25	11.23	5.00	32.3	11.62	5.43	33.5	12.00	5.83	34.6	12.00	6.20	34.7	12.00	6.58	34.7	11.56	6.65	33.5	11.00	6.67	19.9	10.54	6.67	19.2	9.77	6.67	14.2			
	-20	11.88	4.62	34.2	11.95	4.90	34.4	12.00	5.23	34.6	12.00	5.55	34.7	12.00	5.90	34.7	12.00	6.29	34.8	12.00	6.61	21.8	11.47	6.67	20.8	10.76	6.66	15.7			
	-15	12.00	4.02	34.5	12.00	4.38	34.6	12.00	4.53	34.6	12.00	5.16	34.7	12.00	5.55	34.7	12.00	5.89	34.8	12.00	6.17	21.8	12.00	6.42	21.8	11.81	6.66	17.2	11.00	6.67	16.1
	-10	12.00	3.82	34.5	12.00	4.04	34.6	12.00	4.29	34.6	12.00	4.54	34.7	12.00	4.81	34.7	12.00	5.25	34.8	12.00	5.58	21.8	12.86	6.28	23.4	12.84	6.66	18.7	12.30	6.67	18.0
	-7	12.00	3.42	34.5	12.00	3.60	34.6	12.00	3.81	34.6	12.00	4.14	34.7	12.00	4.51	34.7	12.00	4.87	34.8	12.00	5.16	21.8	13.59	6.13	24.7	13.77	6.67	20.1	13.29	6.67	19.4
	-2	12.00	3.01	34.5	12.00	3.11	34.6	12.00	3.29	34.6	12.00	3.64	34.7	12.00	4.03	34.7	12.00	4.23	34.8	12.00	4.38	21.8	13.81	5.47	25.1	14.40	6.46	21.0	14.48	6.67	21.1
	2	12.00	2.45	34.5	12.00	2.62	34.6	12.00	2.79	34.6	12.00	3.15	34.7	12.00	3.55	34.7	12.00	3.83	34.8	12.00	4.06	21.8	13.48	4.98	24.5	14.18	5.87	20.6	14.68	6.27	21.4
	7	12.00	1.90	34.5	12.00	2.10	34.6	12.00	2.35	34.6	12.00	2.64	34.7	12.00	3.00	34.7	12.00	3.26	34.8	12.00	3.53	21.8	13.66	4.46	24.8	14.49	5.35	21.1	15.05	6.17	22.0
	12	13.38	1.73	38.5	13.42	1.98	38.6	13.47	2.30	38.8	13.52	2.64	39.0	13.57	3.08	39.3	13.62	3.48	39.5	13.67	3.83	24.8	14.35	4.40	26.1	15.12	5.25	22.0	15.65	6.01	22.8
	15	13.64	1.61	39.2	13.72	1.85	39.5	13.80	2.18	39.8	13.88	2.51	40.1	13.96	2.94	40.4	14.04	3.35	40.7	14.12	3.70	25.6	14.78	4.25	26.9	15.50	5.07	22.6	16.01	5.78	23.4
	20	14.09	1.45	40.5	14.22	1.67	40.9	14.35	1.96	41.4	14.48	2.21	41.8	14.61	2.59	42.3	14.74	3.04	42.7	14.87	3.47	27.0	15.47	3.98	28.1	16.14	4.77	23.5	16.62	5.71	24.3
	25	14.54	1.37	41.8	14.72	1.56	42.4	14.90	1.82	43.0	15.08	2.08	43.6	15.26	2.43	44.2	15.44	2.87	44.8	15.62	3.28	28.3	16.17	3.76	29.4	16.76	4.52	24.4	17.22	5.63	25.1
	30	14.99	1.36	43.1	15.22	1.55	43.8	15.44	1.80	44.5	15.67	2.01	45.3	15.90	2.27	46.0	16.14	2.68	46.8	16.37	3.06	29.7	16.86	3.52	30.6	17.39	4.24	25.3	17.82	5.35	26.0
	35	15.43	1.35	44.4	15.72	1.51	45.3	16.00	1.71	46.1	16.27	1.91	47.0	16.53	2.14	47.8	16.84	2.53	48.8	17.11	2.89	31.0	17.56	3.32	31.9	18.03	4.02	26.3	18.42	5.11	26.9
	43	16.2	1.35	46.4	16.5	1.48	47.5	16.9	1.63	48.6	17.2	1.83	49.8	17.6	2.06	50.9	18	2.41	52.0	18.3	2.72	33.2	18.7	3.14	33.9	19	3.83	27.7	19.4	4.7	28.3
AE140BXYDEG/EU	LWT (°C)	25			30			35			40			45			50			55			60			65			70		
	Tamb (°C)	HC (kW)	PI (kW)	WF (LPM)	HC (kW)	PI (kW)	WF (LPM)	HC (kW)	PI (kW)	WF (LPM)	HC (kW)	PI (kW)	WF (LPM)	HC (kW)	PI (kW)	WF (LPM)	HC (kW)	PI (kW)	WF (LPM)	HC (kW)	PI (kW)	WF (LPM)	HC (kW)	PI (kW)	WF (LPM)	HC (kW)	PI (kW)	WF (LPM)	HC (kW)	PI (kW)	WF (LPM)
	-30	8.46	3.82	24.3	8.57	4.24	24.7	8.67	4.75	25.0	9.05	5.27	26.1	9.42	5.87	27.3	9.80	6.35	28.4	10.07	6.71	18.3	10.10	7.09	18.4						
	-25	12.25	5.53	35.2	12.68	5.99	36.5	13.11	6.48	37.8	12.96	6.79	37.4	12.18	6.78	35.2	11.60	6.78	33.6	11.20	6.79	20.3	10.57	6.78	19.2	9.78	6.77	14.2			
	-20	12.96	5.13	37.3	13.42	5.59	38.6	13.87	6.11	40.0	13.94	6.52	40.2	13.60	6.78	39.3	12.74	6.79	36.9	12.12	6.79	22.0	11.54	6.78	21.0	10.88	6.79	15.8			
	-15	13.86	4.72	39.9	13.78	5.12	39.7	13.70	5.59	39.5	13.85	6.05	40.0	14.00	6.58	40.5	13.60	6.78	39.4	13.03	6.79	23.6	12.49	6.78	22.7	11.87	6.77	17.3	11.20	6.79	16.3
	-10	13.91	4.49	40.0	13.94	4.75	40.1	13.97	5.05	40.3	13.99	5.35	40.4	14.00	5.69	40.5	14.00	6.20	40.6	14.00	6.61	25.4	13.69	6.77	24.9	13.02	6.78	19.0	12.30	6.65	18.0
	-7	13.93	4.15	40.1	13.97	4.32	40.2	14.00	4.52	40.4	14.00	4.90	40.4	14.00	5.35	40.5	14.00	5.76	40.6	14.00	6.09	25.4	13.88	6.38	25.2	13.72	6.79	20.0	13.51	6.79	19.7
	-2	13.95	3.54	40.1	13.98	3.74	40.3	14.00	3.90	40.4	14.00	4.30	40.4	14.00	4.78	40.5	14.00	5.00	40.6	14.00	5.17	25.4	14.32	5.79	26.0	14.71	6.76	21.4	14.57	6.78	21.3
	2	13.96	2.73	40.1	13.98	3.00	40.3	14.00	3.33	40.4	14.00	3.72	40.4	14.00	4.20	40.5	14.00	4.54	40.6	14.00	4.81	25.4	14.60	5.45	26.5	15.36	6.44	22.4	15.21	6.73	22.2
	7	14.00	2.24	40.3	14.00	2.48	40.3	14.00	2.77	40.4	14.00	3.11	40.4	14.00	3.54	40.5	14.00	3.85	40.6	14.00	4.18	25.4	14.80	4.90	26.9	15.70	5.88	22.9	16.30	6.78	23.8
	12	14.49	1.89	41.7	14.54	2.17	41.9	14.59	2.52	42.1	14.65	2.89	42.3	14.70	3.38	42.5	14.76	3.82	42.8	14.81	4.21	26.9	15.55	4.83	28.3	16.38	5.77	23.9	16.95	6.61	24.7
	15	14.78	1.76	42.5	14.86	2.03	42.8	14.95	2.39	43.1	15.04	2.75	43.4	15.12	3.23	43.7	15.21	3.67	44.1	15.30	4.07	27.7	16.01	4.67	29.1	16.79	5.58	24.4	17.34	6.36	25.3
	20	15.26	1.59	43.9	15.40	1.83	44.3	15.55	2.15	44.8	15.69	2.42	45.3	15.83	2.84	45.8	15.97	3.34	46.3	16.11	3.81	29.2	16.76	4.38	30.5	17.48	5.24	25.5	18.00	6.27	26.3
	25	15.75	1.50	45.3	15.95	1.71	45.9	16.14	1.99	46.5	16.34	2.29	47.2	16.53	2.67	47.8	16.73	3.15	48.5	16.92	3.61	30.7	17.52	4.14	31.8	18.16	4.97	26.4	18.65	6.19	27.2
	30	16.24	1.49	46.7	16.49	1.70	47.5	16.73	1.98	48.2	16.98	2.21	49.0	17.23	2.49	49.9	17.48	2.94	50.7	17.73	3.37	32.2	18.27	3.87	33.2	18.84	4.66	27.4	19.30	5.88	28.2
	35	16.72	1.48	48.1	17.03	1.66	49.0	17.33	1.88	50.0	17.63	2.09	50.9	17.91	2.35	51.8	18.24	2.77	52.9	18.54	3.17	33.6	19.02	3.65	34.6	19.53	4.42	28.4	19.96	5.62	29.1
	43	17.5	1.48	50.3	17.9	1.62	51.5	18.3	1.79	52.7	18.7	2	53.9	19.1	2.26	55.1	19.5	2.64	56.4	19.8	3	36.0	20.2	3.46	36.8	20.6	4.21	30.0	21	5.16	30.7

1. Heating capacity
   - Capacity is according to EN14511.
   - Valid for heated water range (ΔT = Leaving water temperature - Entering water temperature)
   : If LWT≤50°C, ΔT=5°C or 50°C<LWT≤60°C , ΔT=8°C or LWT>60°C, ΔT=10°C, within the minimum ~ maximum water flow rate.
2. Cooling capacity
   - Capacity is according to EN14511
   - Valid for Cooling water range (ΔT =Entering water temperature - Leaving water temperature)
   : ΔT=5°C, within the minimum ~ maximum water flow rate.
3. Power input : Power input is according to EN1451
4. Peak value : Tested without defrost operation in accordance with EN14511.

※ The real capacity would be changed according to the install environment.

2. Outdoor Units

2-9. Capacity table

EHS Mono HT Quiet

1) Maximum Heating Capacity (Peak Value)

LWT (Leaving Water Temp.), Tamb (Ambient Temp.), HC (Heating Capacity), PI (Power input), WF (Water Flow)

	LWT (°C)	25			30			35			40			45			50			55			60			65			70		
	Tamb (°C)	HC (kW)	PI (kW)	WF (LPM)	HC (kW)	PI (kW)	WF (LPM)	HC (kW)	PI (kW)	WF (LPM)	HC (kW)	PI (kW)	WF (LPM)	HC (kW)	PI (kW)	WF (LPM)	HC (kW)	PI (kW)	WF (LPM)	HC (kW)	PI (kW)	WF (LPM)	HC (kW)	PI (kW)	WF (LPM)	HC (kW)	PI (kW)	WF (LPM)	HC (kW)	PI (kW)	WF (LPM)
AE080BXYDGG/EU	-30	5.82	2.53	16.7	5.89	2.80	17.0	5.96	3.14	17.2	6.22	3.48	18.0	6.48	3.88	18.7	6.74	4.19	19.5	6.92	4.43	12.5	6.94	4.69	12.6						
	-25	8.00	3.47	23.0	8.00	3.63	23.0	8.00	3.79	23.1	8.00	4.03	23.1	8.00	4.28	23.1	8.00	4.49	23.2	8.00	4.85	14.5	8.40	5.17	15.3	8.80	5.85	12.8			
	-20	8.00	3.05	23.0	8.00	3.20	23.0	8.00	3.39	23.1	8.00	3.59	23.1	8.00	3.84	23.1	8.00	4.09	23.2	8.00	4.31	14.5	9.11	5.13	16.6	9.12	5.48	13.3			
	-15	8.00	2.61	23.0	8.00	2.86	23.0	8.00	3.14	23.1	8.00	3.36	23.1	8.00	3.61	23.1	8.00	3.84	23.2	8.00	4.01	14.5	9.35	4.87	17.0	9.54	5.24	13.9	8.00	4.85	11.7
	-10	8.00	2.28	23.0	8.00	2.47	23.0	8.00	2.72	23.1	8.00	2.88	23.1	8.00	3.06	23.1	8.00	3.33	23.2	8.00	3.56	14.5	9.65	4.48	17.5	10.01	4.96	14.6	10.46	5.40	15.3
	-7	8.00	2.10	23.0	8.00	2.34	23.0	8.00	2.46	23.1	8.00	2.64	23.1	8.00	2.87	23.1	8.00	3.10	23.2	8.00	3.26	14.5	10.19	4.39	18.5	10.43	4.81	15.2	10.79	5.18	15.7
	-2	8.00	1.95	23.0	8.00	2.05	23.0	8.00	2.10	23.1	8.00	2.32	23.1	8.00	2.57	23.1	8.00	2.69	23.2	8.00	2.79	14.5	10.36	3.92	18.8	10.80	4.62	15.7	11.04	4.86	16.1
	2	8.00	1.62	23.0	8.00	1.72	23.0	8.00	1.82	23.1	8.00	2.01	23.1	8.00	2.26	23.1	8.00	2.44	23.2	8.00	2.58	14.5	10.11	3.57	18.4	10.63	4.21	15.5	11.01	4.75	16.1
	7	8.00	1.29	23.0	8.00	1.43	23.0	8.00	1.60	23.1	8.00	1.80	23.1	8.00	2.05	23.1	8.00	2.23	23.2	8.00	2.50	14.5	9.11	3.16	16.6	9.66	3.79	14.1	10.03	4.29	14.6
	12	8.92	1.18	25.7	8.95	1.35	25.8	8.98	1.57	25.9	9.02	1.80	26.1	9.05	2.11	26.2	9.08	2.38	26.3	9.11	2.71	16.5	9.57	3.11	17.4	10.08	3.72	14.7	10.43	4.25	15.2
	15	9.10	1.09	26.2	9.14	1.26	26.3	9.20	1.49	26.5	9.26	1.71	26.7	9.30	2.01	26.9	9.36	2.29	27.1	9.42	2.62	17.1	9.85	3.01	17.9	10.33	3.59	15.0	10.67	4.10	15.6
	20	9.39	0.99	27.0	9.48	1.14	27.3	9.57	1.34	27.6	9.66	1.50	27.9	9.74	1.77	28.2	9.83	2.08	28.5	9.91	2.46	18.0	10.31	2.82	18.7	10.76	3.38	15.7	11.08	4.04	16.2
	25	9.69	0.93	27.9	9.82	1.07	28.3	9.93	1.24	28.6	10.06	1.42	29.1	10.17	1.66	29.4	10.30	1.96	29.9	10.41	2.32	18.9	10.78	2.67	19.6	11.18	3.20	16.3	11.48	3.99	16.8
	30	9.99	0.93	28.7	10.15	1.06	29.2	10.30	1.23	29.7	10.45	1.37	30.2	10.60	1.55	30.7	10.76	1.83	31.2	10.91	2.17	19.8	11.24	2.49	20.4	11.59	3.01	16.9	11.88	3.79	17.3
	35	10.29	0.92	29.6	10.48	1.03	30.2	10.66	1.17	30.7	10.75	1.29	31.0	10.99	1.46	31.8	11.22	1.73	32.5	11.41	2.04	20.7	11.70	2.35	21.3	12.02	2.85	17.5	12.28	3.62	17.9
	43	10.8	0.92	31.0	11	1.01	31.7	11.3	1.11	32.4	11.5	1.24	33.2	11.7	1.41	33.9	12	1.65	34.7	12.2	1.93	22.1	12.5	2.23	22.6	12.7	2.72	18.5	12.9	3.33	18.9
AE120BXYDGG/EU	LWT (°C)	25			30			35			40			45			50			55			60			65			70		
	Tamb (°C)	HC (kW)	PI (kW)	WF (LPM)	HC (kW)	PI (kW)	WF (LPM)	HC (kW)	PI (kW)	WF (LPM)	HC (kW)	PI (kW)	WF (LPM)	HC (kW)	PI (kW)	WF (LPM)	HC (kW)	PI (kW)	WF (LPM)	HC (kW)	PI (kW)	WF (LPM)	HC (kW)	PI (kW)	WF (LPM)	HC (kW)	PI (kW)	WF (LPM)	HC (kW)	PI (kW)	WF (LPM)
	-30	7.76	3.45	22.3	7.85	3.83	22.6	7.95	4.30	22.9	8.29	4.78	23.9	8.64	5.30	25.0	8.99	5.74	26.1	9.23	6.07	16.7	9.26	6.41	16.8						
	-25	11.23	5.00	32.3	11.62	5.43	33.5	12.00	5.83	34.6	12.00	6.20	34.7	12.00	6.58	34.7	12.00	6.90	34.8	12.00	7.27	21.8	12.00	7.59	21.8	12.00	8.19	17.5			
	-20	11.88	4.62	34.2	11.95	4.90	34.4	12.00	5.23	34.6	12.00	5.55	34.7	12.00	5.90	34.7	12.00	6.29	34.8	12.00	6.61	21.8	12.00	6.98	21.8	12.00	7.43	17.5			
	-15	12.00	4.02	34.5	12.00	4.38	34.6	12.00	4.53	34.6	12.00	5.16	34.7	12.00	5.55	34.7	12.00	5.89	34.8	12.00	6.17	21.8	12.00	6.42	21.8	12.00	6.77	17.5	12.00	7.27	17.5
	-10	12.00	3.82	34.5	12.00	4.04	34.6	12.00	4.29	34.6	12.00	4.54	34.7	12.00	4.81	34.7	12.00	5.25	34.8	12.00	5.58	21.8	12.86	6.28	23.4	13.34	6.92	19.4	13.95	7.57	20.4
	-7	12.00	3.42	34.5	12.00	3.60	34.6	12.00	3.81	34.6	12.00	4.14	34.7	12.00	4.51	34.7	12.00	4.87	34.8	12.00	5.16	21.8	13.59	6.13	24.7	13.90	6.73	20.2	14.38	7.21	21.0
	-2	12.00	3.01	34.5	12.00	3.11	34.6	12.00	3.29	34.6	12.00	3.64	34.7	12.00	4.03	34.7	12.00	4.23	34.8	12.00	4.38	21.8	13.81	5.47	25.1	14.40	6.46	21.0	14.72	6.78	21.5
	2	12.00	2.45	34.5	12.00	2.62	34.6	12.00	2.79	34.6	12.00	3.15	34.7	12.00	3.55	34.7	12.00	3.83	34.8	12.00	4.06	21.8	13.48	4.98	24.5	14.18	5.87	20.6	14.68	6.27	21.4
	7	12.00	1.90	34.5	12.00	2.10	34.6	12.00	2.35	34.6	12.00	2.64	34.7	12.00	3.00	34.7	12.00	3.26	34.8	12.00	3.53	21.8	13.66	4.46	24.8	14.49	5.35	21.1	15.05	6.17	22.0
	12	13.38	1.73	38.5	13.42	1.98	38.6	13.47	2.30	38.8	13.52	2.64	39.0	13.57	3.08	39.3	13.62	3.48	39.5	13.67	3.83	24.8	14.35	4.40	26.1	15.12	5.25	22.0	15.65	6.01	22.8
	15	13.64	1.61	39.2	13.72	1.85	39.5	13.80	2.18	39.8	13.88	2.51	40.1	13.96	2.94	40.4	14.04	3.35	40.7	14.12	3.70	25.6	14.78	4.25	26.9	15.50	5.07	22.6	16.01	5.78	23.4
	20	14.09	1.45	40.5	14.22	1.67	40.9	14.35	1.96	41.4	14.48	2.21	41.8	14.61	2.59	42.3	14.74	3.04	42.7	14.87	3.47	27.0	15.47	3.98	28.1	16.14	4.77	23.5	16.62	5.71	24.3
	25	14.54	1.37	41.8	14.72	1.56	42.4	14.90	1.82	43.0	15.08	2.08	43.6	15.26	2.43	44.2	15.44	2.87	44.8	15.62	3.28	28.3	16.17	3.76	29.4	16.76	4.52	24.4	17.22	5.63	25.1
	30	14.99	1.36	43.1	15.22	1.55	43.8	15.44	1.80	44.5	15.67	2.01	45.3	15.90	2.27	46.0	16.14	2.68	46.8	16.37	3.06	29.7	16.86	3.52	30.6	17.39	4.24	25.3	17.82	5.35	26.0
	35	15.43	1.35	44.4	15.72	1.51	45.3	16.00	1.71	46.1	16.27	1.91	47.0	16.53	2.14	47.8	16.84	2.53	48.8	17.11	2.89	31.0	17.56	3.32	31.9	18.03	4.02	26.3	18.42	5.11	26.9
	43	16.2	1.35	46.4	16.5	1.48	47.5	16.9	1.63	48.6	17.2	1.83	49.8	17.6	2.06	50.9	18	2.41	52.0	18.3	2.72	33.2	18.7	3.14	33.9	19	3.83	27.7	19.4	4.7	28.3
AE140BXYDGG/EU	LWT (°C)	25			30			35			40			45			50			55			60			65			70		
	Tamb (°C)	HC (kW)	PI (kW)	WF (LPM)	HC (kW)	PI (kW)	WF (LPM)	HC (kW)	PI (kW)	WF (LPM)	HC (kW)	PI (kW)	WF (LPM)	HC (kW)	PI (kW)	WF (LPM)	HC (kW)	PI (kW)	WF (LPM)	HC (kW)	PI (kW)	WF (LPM)	HC (kW)	PI (kW)	WF (LPM)	HC (kW)	PI (kW)	WF (LPM)	HC (kW)	PI (kW)	WF (LPM)
	-30	8.46	3.82	24.3	8.57	4.24	24.7	8.67	4.75	25.0	9.05	5.27	26.1	9.42	5.87	27.3	9.80	6.35	28.4	10.07	6.71	18.3	10.10	7.09	18.4						
	-25	12.25	5.53	35.2	12.68	5.99	36.5	13.11	6.48	37.8	13.26	6.94	38.3	13.41	7.47	38.8	13.75	8.05	39.9	14.00	8.48	25.4	13.68	8.78	24.9	13.29	9.20	19.4			
	-20	12.96	5.13	37.3	13.42	5.59	38.6	13.87	6.11	40.0	13.94	6.52	40.3	14.00	6.98	40.5	14.00	7.46	40.6	14.00	7.84	25.4	14.00	8.23	25.4	14.00	8.77	20.4			
	-15	13.86	4.72	39.9	13.78	5.12	39.7	13.70	5.59	39.5	13.85	6.05	40.0	14.00	6.58	40.5	14.00	6.98	40.6	14.00	7.30	25.4	14.00	7.60	25.4	14.00	8.01	20.4	14.00	8.48	20.4
	-10	13.91	4.49	40.0	13.94	4.75	40.1	13.97	5.05	40.3	13.99	5.35	40.4	14.00	5.69	40.5	14.00	6.20	40.6	14.00	6.61	25.4	14.00	6.93	25.4	14.00	7.37	20.4	14.65	8.05	21.4
	-7	13.93	4.15	40.1	13.97	4.32	40.2	14.00	4.52	40.4	14.00	4.90	40.4	14.00	5.35	40.5	14.00	5.76	40.6	14.00	6.09	25.4	14.27	6.54	25.9	14.60	7.19	21.3	15.10	7.70	22.0
	-2	13.95	3.54	40.1	13.98	3.74	40.3	14.00	3.90	40.4	14.00	4.30	40.4	14.00	4.78	40.5	14.00	5.00	40.6	14.00	5.17	25.4	14.50	5.84	26.4	15.12	6.87	22.0	15.46	7.22	22.6
	2	13.96	2.73	40.1	13.98	3.00	40.3	14.00	3.33	40.4	14.00	3.72	40.4	14.00	4.20	40.5	14.00	4.54	40.6	14.00	4.81	25.4	14.60	5.45	26.5	15.36	6.44	22.4	15.90	6.88	23.2
	7	14.00	2.24	40.3	14.00	2.48	40.3	14.00	2.77	40.4	14.00	3.11	40.4	14.00	3.54	40.5	14.00	3.85	40.6	14.00	4.18	25.4	14.00	4.90	25.4	15.70	5.88	22.9	16.30	6.78	23.8
	12	14.49	1.89	41.7	14.54	2.17	41.9	14.59	2.52	42.1	14.65	2.89	42.3	14.70	3.38	42.5	14.76	3.82	42.8	14.81	4.21	26.9	15.55	4.83	28.3	16.38	5.77	23.9	16.95	6.61	24.7
	15	14.78	1.76	42.5	14.86	2.03	42.8	14.95	2.39	43.1	15.04	2.75	43.4	15.12	3.23	43.7	15.21	3.67	44.1	15.30	4.07	27.7	16.01	4.67	29.1	16.79	5.58	24.4	17.34	6.36	25.3
	20	15.26	1.59	43.9	15.40	1.83	44.3	15.55	2.15	44.8	15.69	2.42	45.3	15.83	2.84	45.8	15.97	3.34	46.3	16.11	3.81	29.2	16.76	4.38	30.5	17.48	5.24	25.5	18.00	6.27	26.3
	25	15.75	1.50	45.3	15.95	1.71	45.9	16.14	1.99	46.5	16.34	2.29	47.2	16.53	2.67	47.8	16.73	3.15	48.5	16.92	3.61	30.7	17.52	4.14	31.8	18.16	4.97	26.4	18.65	6.19	27.2
	30	16.24	1.49	46.7	16.49	1.70	47.5	16.73	1.98	48.2	16.98	2.21	49.0	17.23	2.49	49.9	17.48	2.94	50.7	17.73	3.37	32.2	18.27	3.87	33.2	18.84	4.66	27.4	19.30	5.88	28.2
	35	16.72	1.48	48.1	17.03	1.66	49.0	17.33	1.88	50.0	17.63	2.09	50.9	17.91	2.35	51.8	18.24	2.77	52.9	18.54	3.17	33.6	19.02	3.65	34.6	19.53	4.42	28.4	19.96	5.62	29.1
	43	17.5	1.48	50.3	17.9	1.62	51.5	18.3	1.79	52.7	18.7	2	53.9	19.1	2.26	55.1	19.5	2.64	56.4	19.8	3	36.0	20.2	3.46	36.8	20.6	4.21	30.0	21	5.16	30.7

1. Heating capacity
   - Capacity is according to EN14511.
   - Valid for heated water range (ΔT = Leaving water temperature - Entering water temperature)
   : If LWT≤50°C, ΔT=5°C or 50°C<LWT≤60°C , ΔT=8°C or LWT>60°C, ΔT=10°C, within the minimum ~ maximum water flow rate.
2. Cooling capacity
   - Capacity is according to EN14511
   - Valid for Cooling water range (ΔT =Entering water temperature - Leaving water temperature)
   : ΔT=5°C, within the minimum ~ maximum water flow rate.
3. Power input : Power input is according to EN1451
4. Peak value : Tested without defrost operation in accordance with EN14511.

※ The real capacity would be changed according to the install environment.

2. Outdoor Units

2-9. Capacity table

EHS Mono HT Quiet

2) Maximum Heating Capacity (Integrated Value)

LWT (Leaving Water Temp.), Tamb (Ambient Temp.), HC (Heating Capacity), PI (Power input), WF (Water Flow)

	LWT (°C)	25			30			35			40			45			50			55			60			65			70		
	Tamb (°C)	HC (kW)	PI (kW)	WF (LPM)	HC (kW)	PI (kW)	WF (LPM)	HC (kW)	PI (kW)	WF (LPM)	HC (kW)	PI (kW)	WF (LPM)	HC (kW)	PI (kW)	WF (LPM)	HC (kW)	PI (kW)	WF (LPM)	HC (kW)	PI (kW)	WF (LPM)	HC (kW)	PI (kW)	WF (LPM)	HC (kW)	PI (kW)	WF (LPM)	HC (kW)	PI (kW)	WF (LPM)
AE080BXYDEG/EU	-30	5.82	2.53	16.7	5.89	2.80	17.0	5.96	3.14	17.2	6.22	3.48	18.0	6.48	3.88	18.7	6.74	4.19	19.5	6.92	4.43	12.5	6.94	4.69	12.6						
	-25	8.00	3.47	23.0	8.00	3.63	23.0	8.00	3.79	23.1	8.00	4.03	23.1	8.00	4.28	23.1	8.00	4.49	23.2	8.00	4.85	14.5	8.40	5.17	15.3	7.95	5.28	11.6			
	-20	8.00	3.05	23.0	8.00	3.20	23.0	8.00	3.39	23.1	8.00	3.59	23.1	8.00	3.84	23.1	8.00	4.09	23.2	8.00	4.31	14.5	9.11	5.13	16.6	8.75	5.26	12.7			
	-15	8.00	2.61	23.0	8.00	2.86	23.0	8.00	3.14	23.1	8.00	3.36	23.1	8.00	3.61	23.1	8.00	3.84	23.2	8.00	4.01	14.5	9.35	4.87	17.0	9.54	5.24	13.9	8.00	4.85	11.7
	-10	7.95	2.34	22.9	7.95	2.50	22.9	8.00	2.72	23.1	8.00	2.88	23.1	8.00	3.06	23.1	8.00	3.33	23.2	8.00	3.56	14.5	9.56	4.44	17.4	9.95	4.93	14.5	9.57	4.94	14.0
	-7	7.96	2.18	22.9	7.96	2.33	22.9	7.96	2.54	23.0	7.96	2.77	23.0	7.96	2.95	23.0	7.96	3.18	23.1	8.00	3.26	14.5	9.98	4.29	18.1	9.98	4.60	14.5	9.68	4.65	14.1
	-2	7.97	2.07	22.9	7.97	2.22	22.9	7.97	2.41	23.0	7.97	2.63	23.0	7.97	2.79	23.1	7.97	2.94	23.1	7.98	3.06	14.5	9.90	4.20	18.0	9.79	4.48	14.3	9.64	4.55	14.1
	2	7.98	1.59	23.0	7.98	1.77	23.0	7.98	2.01	23.0	7.98	2.22	23.0	7.98	2.49	23.1	7.98	2.64	23.1	7.98	2.76	14.5	9.41	3.60	17.1	9.49	4.10	13.8	9.35	4.23	13.6
	7	8.00	1.29	23.0	8.00	1.43	23.0	8.00	1.60	23.1	8.00	1.80	23.1	8.00	2.05	23.1	8.00	2.23	23.2	8.00	2.50	14.5	9.11	3.16	16.6	9.66	3.79	14.1	10.03	4.37	14.6
	12	8.92	1.18	25.7	8.95	1.35	25.8	8.98	1.57	25.9	9.02	1.80	26.1	9.05	2.11	26.2	9.08	2.38	26.3	9.11	2.71	16.5	9.57	3.11	17.4	10.08	3.72	14.7	10.43	4.26	15.2
	15	9.10	1.09	26.2	9.14	1.26	26.3	9.20	1.49	26.5	9.26	1.71	26.7	9.30	2.01	26.9	9.36	2.29	27.1	9.42	2.62	17.1	9.85	3.01	17.9	10.33	3.59	15.0	10.67	4.10	15.6
	20	9.39	0.99	27.0	9.48	1.14	27.3	9.57	1.34	27.6	9.66	1.50	27.9	9.74	1.77	28.2	9.83	2.08	28.5	9.91	2.46	18.0	10.31	2.82	18.7	10.76	3.38	15.7	11.08	4.04	16.2
	25	9.69	0.93	27.9	9.82	1.07	28.3	9.93	1.24	28.6	10.06	1.42	29.1	10.17	1.66	29.4	10.30	1.96	29.9	10.41	2.32	18.9	10.78	2.67	19.6	11.18	3.20	16.3	11.48	3.99	16.8
	30	9.99	0.93	28.7	10.15	1.06	29.2	10.30	1.23	29.7	10.45	1.37	30.2	10.60	1.55	30.7	10.76	1.83	31.2	10.91	2.17	19.8	11.24	2.49	20.4	11.59	3.01	16.9	11.88	3.79	17.3
	35	10.29	0.92	29.6	10.48	1.03	30.2	10.66	1.17	30.7	10.75	1.29	31.0	10.99	1.46	31.8	11.22	1.73	32.5	11.41	2.04	20.7	11.70	2.35	21.3	12.02	2.85	17.5	12.28	3.62	17.9
	43	10.8	0.92	31.0	11	1.01	31.7	11.3	1.11	32.4	11.5	1.24	33.2	11.7	1.41	33.9	12	1.65	34.7	12.2	1.93	22.1	12.5	2.23	22.6	12.7	2.72	18.5	12.9	3.33	18.9
AE120BXYDEG/EU	LWT (°C)	25			30			35			40			45			50			55			60			65			70		
	Tamb (°C)	HC (kW)	PI (kW)	WF (LPM)	HC (kW)	PI (kW)	WF (LPM)	HC (kW)	PI (kW)	WF (LPM)	HC (kW)	PI (kW)	WF (LPM)	HC (kW)	PI (kW)	WF (LPM)	HC (kW)	PI (kW)	WF (LPM)	HC (kW)	PI (kW)	WF (LPM)	HC (kW)	PI (kW)	WF (LPM)	HC (kW)	PI (kW)	WF (LPM)	HC (kW)	PI (kW)	WF (LPM)
	-30	7.76	3.45	22.3	7.85	3.83	22.6	7.95	4.30	22.9	8.29	4.78	23.9	8.64	5.30	25.0	8.99	5.74	26.1	9.23	6.07	16.7	9.26	6.41	16.8						
	-25	11.23	5.00	32.3	11.62	5.43	33.5	12.00	5.83	34.6	12.00	6.20	34.7	12.00	6.58	34.7	11.56	6.65	33.5	11.00	6.67	19.9	10.54	6.67	19.2	9.77	6.67	14.2			
	-20	11.88	4.62	34.2	11.95	4.90	34.4	12.00	5.23	34.6	12.00	5.55	34.7	12.00	5.90	34.7	12.00	6.29	34.8	12.00	6.61	21.8	11.47	6.67	20.8	10.76	6.66	15.7			
	-15	12.00	4.23	34.5	12.00	4.53	34.6	12.00	4.83	34.6	12.00	5.23	34.7	12.00	5.63	34.7	12.00	5.93	34.8	12.00	6.28	21.8	12.00	6.57	21.8	11.53	6.66	16.8	11.00	6.67	16.1
	-10	11.43	3.96	32.9	11.96	4.43	34.4	11.94	4.77	34.4	11.94	5.14	34.5	11.94	5.57	34.5	11.94	5.90	34.6	11.94	6.15	21.7	11.72	6.33	21.3	10.94	6.26	15.9	10.71	6.42	15.6
	-7	11.93	3.85	34.3	11.85	4.10	34.1	11.95	4.47	34.5	11.95	4.86	34.5	11.95	5.32	34.6	11.95	5.75	34.6	11.95	6.07	21.7	11.65	6.13	21.2	11.18	6.16	16.3	11.06	6.40	16.1
	-2	11.26	3.45	32.4	11.53	3.79	33.2	11.97	4.23	34.5	11.97	4.62	34.6	11.97	5.10	34.6	11.97	5.26	34.7	11.97	5.37	21.7	12.62	6.10	22.9	11.54	6.17	16.8	11.45	6.40	16.7
	2	10.63	2.50	30.6	10.81	2.83	31.1	11.96	3.53	34.5	11.96	3.90	34.5	11.96	4.36	34.6	11.96	4.62	34.7	11.96	4.84	21.7	12.55	5.47	22.8	12.37	5.99	18.0	11.92	6.02	17.4
	7	12.00	1.90	34.5	12.00	2.10	34.6	12.00	2.35	34.6	12.00	2.64	34.7	12.00	3.00	34.7	12.00	3.26	34.8	12.00	3.53	21.8	13.66	4.46	24.8	14.49	5.35	21.1	15.05	6.17	22.0
	12	13.38	1.73	38.5	13.42	1.98	38.6	13.47	2.30	38.8	13.52	2.64	39.0	13.57	3.08	39.3	13.62	3.48	39.5	13.67	3.83	24.8	14.35	4.40	26.1	15.12	5.25	22.0	15.65	6.01	22.8
	15	13.64	1.61	39.2	13.72	1.85	39.5	13.80	2.18	39.8	13.88	2.51	40.1	13.96	2.94	40.4	14.04	3.35	40.7	14.12	3.70	25.6	14.78	4.25	26.9	15.50	5.07	22.6	16.01	5.78	23.4
	20	14.09	1.45	40.5	14.22	1.67	40.9	14.35	1.96	41.4	14.48	2.21	41.8	14.61	2.59	42.3	14.74	3.04	42.7	14.87	3.47	27.0	15.47	3.98	28.1	16.14	4.77	23.5	16.62	5.71	24.3
	25	14.54	1.37	41.8	14.72	1.56	42.4	14.90	1.82	43.0	15.08	2.08	43.6	15.26	2.43	44.2	15.44	2.87	44.8	15.62	3.28	28.3	16.17	3.76	29.4	16.76	4.52	24.4	17.22	5.63	25.1
	30	14.99	1.36	43.1	15.22	1.55	43.8	15.44	1.80	44.5	15.67	2.01	45.3	15.90	2.27	46.0	16.14	2.68	46.8	16.37	3.06	29.7	16.86	3.52	30.6	17.39	4.24	25.3	17.82	5.35	26.0
	35	15.43	1.35	44.4	15.72	1.51	45.3	16.00	1.71	46.1	16.27	1.91	47.0	16.53	2.14	47.8	16.84	2.53	48.8	17.11	2.89	31.0	17.56	3.32	31.9	18.03	4.02	26.3	18.42	5.11	26.9
	43	16.2	1.35	46.4	16.5	1.48	47.5	16.9	1.63	48.6	17.2	1.83	49.8	17.6	2.06	50.9	18	2.41	52.0	18.3	2.72	33.2	18.7	3.14	33.9	19	3.83	27.7	19.4	4.7	28.3
AE140BXYDEG/EU	LWT (°C)	25			30			35			40			45			50			55			60			65			70		
	Tamb (°C)	HC (kW)	PI (kW)	WF (LPM)	HC (kW)	PI (kW)	WF (LPM)	HC (kW)	PI (kW)	WF (LPM)	HC (kW)	PI (kW)	WF (LPM)	HC (kW)	PI (kW)	WF (LPM)	HC (kW)	PI (kW)	WF (LPM)	HC (kW)	PI (kW)	WF (LPM)	HC (kW)	PI (kW)	WF (LPM)	HC (kW)	PI (kW)	WF (LPM)	HC (kW)	PI (kW)	WF (LPM)
	-30	8.46	3.82	24.3	8.57	4.24	24.7	8.67	4.75	25.0	9.05	5.27	26.1	9.42	5.87	27.3	9.80	6.35	28.4	10.07	6.71	18.3	9.62	6.75	17.5						
	-25	12.25	5.53	35.2	12.68	5.99	36.5	13.11	6.48	37.8	12.96	6.79	37.4	12.18	6.78	35.2	11.60	6.78	33.6	11.20	6.79	20.3	10.57	6.78	19.2	9.78	6.77	14.2			
	-20	12.96	5.13	37.3	13.42	5.59	38.6	13.87	6.11	40.0	13.94	6.52	40.2	13.60	6.78	39.3	12.74	6.79	36.9	12.12	6.79	22.0	11.54	6.78	21.0	10.88	6.79	15.8			
	-15	13.86	4.91	39.9	13.78	5.23	39.7	13.70	5.59	39.5	13.85	6.10	40.0	14.00	6.67	40.5	13.45	6.78	39.0	12.95	6.79	23.5	12.49	6.78	22.7	11.64	6.77	16.9	11.20	6.79	16.3
	-10	12.00	4.20	34.5	12.56	4.70	36.1	13.11	5.29	37.8	13.45	5.85	38.8	13.79	6.51	39.9	12.95	6.47	37.5	12.42	6.47	22.5	12.32	6.59	22.4	11.12	6.43	16.2	11.01	6.62	16.1
	-7	12.53	4.08	36.0	12.87	4.50	37.0	13.20	4.98	38.1	13.55	5.56	39.1	13.89	6.25	40.2	13.21	6.41	38.3	12.45	6.39	22.6	12.23	6.47	22.2	11.74	6.54	17.1	11.60	6.62	16.9
	-2	11.82	3.67	34.0	12.11	4.02	34.9	12.40	4.42	35.8	12.74	4.96	36.8	13.07	5.62	37.8	13.61	6.03	39.4	13.98	6.48	25.4	13.25	6.47	24.1	12.12	6.51	17.6	11.85	6.49	17.3
	2	11.52	2.73	33.1	11.71	3.09	33.7	11.90	3.55	34.3	12.42	4.09	35.9	12.94	4.76	37.4	13.27	5.18	38.5	13.50	5.51	24.5	13.59	5.99	24.7	13.40	6.56	19.5	12.91	6.79	18.9
	7	14.00	2.24	40.3	14.00	2.48	40.3	14.00	2.77	40.4	14.00	3.11	40.4	14.00	3.54	40.5	14.00	3.85	40.6	14.00	4.18	25.4	14.80	4.90	26.9	15.70	5.88	22.9	16.30	6.78	23.8
	12	14.49	1.89	41.7	14.54	2.17	41.9	14.59	2.52	42.1	14.65	2.89	42.3	14.70	3.38	42.5	14.76	3.82	42.8	14.81	4.21	26.9	15.55	4.83	28.3	16.38	5.77	23.9	16.95	6.61	24.7
	15	14.78	1.76	42.5	14.86	2.03	42.8	14.95	2.39	43.1	15.04	2.75	43.4	15.12	3.23	43.7	15.21	3.67	44.1	15.30	4.07	27.7	16.01	4.67	29.1	16.79	5.58	24.4	17.34	6.36	25.3
	20	15.26	1.59	43.9	15.40	1.83	44.3	15.55	2.15	44.8	15.69	2.42	45.3	15.83	2.84	45.8	15.97	3.34	46.3	16.11	3.81	29.2	16.76	4.38	30.5	17.48	5.24	25.5	18.00	6.27	26.3
	25	15.75	1.50	45.3	15.95	1.71	45.9	16.14	1.99	46.5	16.34	2.29	47.2	16.53	2.67	47.8	16.73	3.15	48.5	16.92	3.61	30.7	17.52	4.14	31.8	18.16	4.97	26.4	18.65	6.19	27.2
	30	16.24	1.49	46.7	16.49	1.70	47.5	16.73	1.98	48.2	16.98	2.21	49.0	17.23	2.49	49.9	17.48	2.94	50.7	17.73	3.37	32.2	18.27	3.87	33.2	18.84	4.66	27.4	19.30	5.88	28.2
	35	16.72	1.48	48.1	17.03	1.66	49.0	17.33	1.88	50.0	17.63	2.09	50.9	17.91	2.35	51.8	18.24	2.77	52.9	18.54	3.17	33.6	19.02	3.65	34.6	19.53	4.42	28.4	19.96	5.62	29.1
	43	17.5	1.48	50.3	17.9	1.62	51.5	18.3	1.79	52.7	18.7	2	53.9	19.1	2.26	55.1	19.5	2.64	56.4	19.8	3	36.0	20.2	3.46	36.8	20.6	4.21	30.0	21	5.16	30.7

1. Heating capacity
   - Capacity is according to EN14511.
   - Valid for heated water range (ΔT = Leaving water temperature - Entering water temperature)
   : If LWT≤50°C, ΔT=5°C or 50°C<LWT≤60°C , ΔT=8°C or LWT>60°C, ΔT=10°C, within the minimum ~ maximum water flow rate.
2. Cooling capacity
   - Capacity is according to EN14511
   - Valid for Cooling water range (ΔT =Entering water temperature - Leaving water temperature)
   : ΔT=5°C, within the minimum ~ maximum water flow rate.
3. Power input : Power input is according to EN1451
4. Peak value : Tested without defrost operation in accordance with EN14511.

※ The real capacity would be changed according to the install environment.

2. Outdoor Units

2-9. Capacity table

EHS Mono HT Quiet

2) Maximum Heating Capacity (Integrated Value)

LWT (Leaving Water Temp.), Tamb (Ambient Temp.), HC (Heating Capacity), PI (Power input), WF (Water Flow)

	LWT (°C)	25			30			35			40			45			50			55			60			65			70		
	Tamb (°C)	HC (kW)	PI (kW)	WF (LPM)	HC (kW)	PI (kW)	WF (LPM)	HC (kW)	PI (kW)	WF (LPM)	HC (kW)	PI (kW)	WF (LPM)	HC (kW)	PI (kW)	WF (LPM)	HC (kW)	PI (kW)	WF (LPM)	HC (kW)	PI (kW)	WF (LPM)	HC (kW)	PI (kW)	WF (LPM)	HC (kW)	PI (kW)	WF (LPM)	HC (kW)	PI (kW)	WF (LPM)
AE080BXYDGG/EU	-30	5.82	2.53	16.7	5.89	2.80	17.0	5.96	3.14	17.2	6.22	3.48	18.0	6.48	3.88	18.7	6.74	4.19	19.5	6.92	4.43	12.5	6.94	4.69	12.6						
	-25	8.00	3.47	23.0	8.00	3.63	23.0	8.00	3.79	23.1	8.00	4.03	23.1	8.00	4.28	23.1	8.00	4.49	23.2	8.00	4.85	14.5	8.40	5.17	15.3	8.80	5.85	12.8			
	-20	8.00	3.05	23.0	8.00	3.20	23.0	8.00	3.39	23.1	8.00	3.59	23.1	8.00	3.84	23.1	8.00	4.09	23.2	8.00	4.31	14.5	9.11	5.13	16.6	9.12	5.48	13.3			
	-15	8.00	2.61	23.0	8.00	2.86	23.0	8.00	3.14	23.1	8.00	3.36	23.1	8.00	3.61	23.1	8.00	3.84	23.2	8.00	4.01	14.5	9.35	4.87	17.0	9.54	5.24	13.9	8.00	4.85	11.7
	-10	7.95	2.34	22.9	7.95	2.50	22.9	8.00	2.72	23.1	8.00	2.88	23.1	8.00	3.06	23.1	8.00	3.33	23.2	8.00	3.56	14.5	9.56	4.44	17.4	9.95	4.93	14.5	9.57	4.94	14.0
	-7	7.96	2.18	22.9	7.96	2.33	22.9	7.96	2.54	23.0	7.96	2.77	23.0	7.96	3.03	23.0	7.96	3.15	23.1	8.00	3.26	14.5	9.98	4.29	18.1	9.98	4.60	14.5	9.68	4.65	14.1
	-2	7.97	2.07	22.9	7.97	2.22	22.9	7.97	2.41	23.0	7.97	2.63	23.0	7.97	2.82	23.1	7.97	2.95	23.1	7.98	3.06	14.5	9.90	4.20	18.0	9.79	4.49	14.3	9.64	4.86	14.1
	2	7.98	1.59	23.0	7.98	1.77	23.0	7.98	2.01	23.0	7.98	2.22	23.0	7.98	2.49	23.1	7.98	2.64	23.1	7.98	2.76	14.5	9.41	3.60	17.1	9.49	4.10	13.8	9.35	4.32	13.6
	7	8.00	1.29	23.0	8.00	1.43	23.0	8.00	1.60	23.1	8.00	1.80	23.1	8.00	2.05	23.1	8.00	2.23	23.2	8.00	2.50	14.5	9.11	3.16	16.6	9.66	3.79	14.1	10.03	4.37	14.6
	12	8.92	1.18	25.7	8.95	1.35	25.8	8.98	1.57	25.9	9.02	1.80	26.1	9.05	2.11	26.2	9.08	2.38	26.3	9.11	2.71	16.5	9.57	3.11	17.4	10.08	3.72	14.7	10.43	4.26	15.2
	15	9.10	1.09	26.2	9.14	1.26	26.3	9.20	1.49	26.5	9.26	1.71	26.7	9.30	2.01	26.9	9.36	2.29	27.1	9.42	2.62	17.1	9.85	3.01	17.9	10.33	3.59	15.0	10.67	4.10	15.6
	20	9.39	0.99	27.0	9.48	1.14	27.3	9.57	1.34	27.6	9.66	1.50	27.9	9.74	1.77	28.2	9.83	2.08	28.5	9.91	2.46	18.0	10.31	2.82	18.7	10.76	3.38	15.7	11.08	4.04	16.2
	25	9.69	0.93	27.9	9.82	1.07	28.3	9.93	1.24	28.6	10.06	1.42	29.1	10.17	1.66	29.4	10.30	1.96	29.9	10.41	2.32	18.9	10.78	2.67	19.6	11.18	3.20	16.3	11.48	3.99	16.8
	30	9.99	0.93	28.7	10.15	1.06	29.2	10.30	1.23	29.7	10.45	1.37	30.2	10.60	1.55	30.7	10.76	1.83	31.2	10.91	2.17	19.8	11.24	2.49	20.4	11.59	3.01	16.9	11.88	3.79	17.3
	35	10.29	0.92	29.6	10.48	1.03	30.2	10.66	1.17	30.7	10.75	1.29	31.0	10.82	1.44	31.3	11.22	1.73	32.5	11.41	2.04	20.7	11.70	2.35	21.3	12.02	2.85	17.5	12.28	3.62	17.9
	43	10.8	0.92	31.0	11	1.01	31.7	11.3	1.11	32.4	11.5	1.24	33.2	11.7	1.41	33.9	12	1.65	34.7	12.2	1.93	22.1	12.5	2.23	22.6	12.7	2.72	18.5	12.9	3.33	18.9
AE120BXYDGG/EU	LWT (°C)	25			30			35			40			45			50			55			60			65			70		
	Tamb (°C)	HC (kW)	PI (kW)	WF (LPM)	HC (kW)	PI (kW)	WF (LPM)	HC (kW)	PI (kW)	WF (LPM)	HC (kW)	PI (kW)	WF (LPM)	HC (kW)	PI (kW)	WF (LPM)	HC (kW)	PI (kW)	WF (LPM)	HC (kW)	PI (kW)	WF (LPM)	HC (kW)	PI (kW)	WF (LPM)	HC (kW)	PI (kW)	WF (LPM)	HC (kW)	PI (kW)	WF (LPM)
	-30	7.76	3.45	22.3	7.85	3.83	22.6	7.95	4.30	22.9	8.29	4.78	23.9	8.64	5.30	25.0	8.99	5.74	26.1	9.23	6.07	16.7	9.26	6.41	16.8						
	-25	11.23	5.00	32.3	11.62	5.43	33.5	12.00	5.83	34.6	12.00	6.20	34.7	12.00	6.58	34.7	12.00	6.90	34.8	12.00	7.27	21.8	12.00	7.59	21.8	12.00	8.19	17.5			
	-20	11.88	4.62	34.2	11.95	4.90	34.4	12.00	5.23	34.6	12.00	5.55	34.7	12.00	5.90	34.7	12.00	6.29	34.8	12.00	6.61	21.8	12.00	6.98	21.8	12.00	7.43	17.5			
	-15	12.00	4.23	34.5	12.00	4.53	34.6	12.00	4.83	34.6	12.00	5.23	34.7	12.00	5.63	34.7	12.00	5.93	34.8	12.00	6.28	21.8	12.00	6.65	21.8	12.00	7.00	17.5	12.00	7.28	17.5
	-10	11.43	3.96	32.9	11.96	4.43	34.4	11.94	4.77	34.4	11.94	5.14	34.5	11.94	5.57	34.5	11.94	5.90	34.6	11.94	6.15	21.7	12.75	6.88	23.2	13.27	7.59	19.3	12.76	7.65	18.6
	-7	11.93	3.85	34.3	11.85	4.10	34.1	11.95	4.47	34.5	11.95	4.86	34.5	11.95	5.32	34.6	11.95	5.75	34.6	11.95	6.07	21.7	13.30	7.00	24.2	13.30	7.33	19.4	12.67	7.29	18.5
	-2	11.26	3.45	32.4	11.53	3.79	33.2	11.97	4.23	34.5	11.97	4.62	34.6	11.97	5.10	34.6	11.97	5.26	34.7	11.97	5.37	21.7	13.20	6.38	24.0	13.05	6.97	19.0	12.86	7.18	18.8
	2	10.63	2.50	30.6	10.81	2.83	31.1	11.96	3.53	34.5	11.96	3.90	34.5	11.96	4.36	34.6	11.96	4.62	34.7	11.96	4.84	21.7	12.55	5.47	22.8	12.66	6.13	18.4	12.46	6.29	18.2
	7	12.00	1.90	34.5	12.00	2.10	34.6	12.00	2.35	34.6	12.00	2.64	34.7	12.00	3.00	34.7	12.00	3.26	34.8	12.00	3.53	21.8	13.66	4.46	24.8	14.49	5.35	21.1	15.05	6.17	22.0
	12	13.38	1.73	38.5	13.42	1.98	38.6	13.47	2.30	38.8	13.52	2.64	39.0	13.57	3.08	39.3	13.62	3.48	39.5	13.67	3.83	24.8	14.35	4.40	26.1	15.12	5.25	22.0	15.65	6.01	22.8
	15	13.64	1.61	39.2	13.72	1.85	39.5	13.80	2.18	39.8	13.88	2.51	40.1	13.96	2.94	40.4	14.04	3.35	40.7	14.12	3.70	25.6	14.78	4.25	26.9	15.50	5.07	22.6	16.01	5.78	23.4
	20	14.09	1.45	40.5	14.22	1.67	40.9	14.35	1.96	41.4	14.48	2.21	41.8	14.61	2.59	42.3	14.74	3.04	42.7	14.87	3.47	27.0	15.47	3.98	28.1	16.14	4.77	23.5	16.62	5.71	24.3
	25	14.54	1.37	41.8	14.72	1.56	42.4	14.90	1.82	43.0	15.08	2.08	43.6	15.26	2.43	44.2	15.44	2.87	44.8	15.62	3.28	28.3	16.17	3.76	29.4	16.76	4.52	24.4	17.22	5.63	25.1
	30	14.99	1.36	43.1	15.22	1.55	43.8	15.44	1.80	44.5	15.67	2.01	45.3	15.90	2.27	46.0	16.14	2.68	46.8	16.37	3.06	29.7	16.86	3.52	30.6	17.39	4.24	25.3	17.82	5.35	26.0
	35	15.43	1.35	44.4	15.72	1.51	45.3	16.00	1.71	46.1	16.27	1.91	47.0	16.53	2.14	47.8	16.84	2.53	48.8	17.11	2.89	31.0	17.56	3.32	31.9	18.03	4.02	26.3	18.42	5.11	26.9
	43	16.2	1.35	46.4	16.5	1.48	47.5	16.9	1.63	48.6	17.2	1.83	49.8	17.6	2.06	50.9	18	2.41	52.0	18.3	2.72	33.2	18.7	3.14	33.9	19	3.83	27.7	19.4	4.7	28.3
AE140BXYDGG/EU	LWT (°C)	25			30			35			40			45			50			55			60			65			70		
	Tamb (°C)	HC (kW)	PI (kW)	WF (LPM)	HC (kW)	PI (kW)	WF (LPM)	HC (kW)	PI (kW)	WF (LPM)	HC (kW)	PI (kW)	WF (LPM)	HC (kW)	PI (kW)	WF (LPM)	HC (kW)	PI (kW)	WF (LPM)	HC (kW)	PI (kW)	WF (LPM)	HC (kW)	PI (kW)	WF (LPM)	HC (kW)	PI (kW)	WF (LPM)	HC (kW)	PI (kW)	WF (LPM)
	-30	8.46	3.82	24.3	8.57	4.24	24.7	8.67	4.75	25.0	9.05	5.27	26.1	9.42	5.87	27.3	9.80	6.35	28.4	10.07	6.71	18.3	10.10	7.09	18.4						
	-25	12.25	5.53	35.2	12.68	5.99	36.5	13.11	6.48	37.8	13.26	6.94	38.3	13.41	7.47	38.8	13.76	8.05	39.9	14.00	8.48	25.4	13.68	8.78	24.9	13.29	9.20	19.4			
	-20	12.96	5.13	37.3	13.42	5.59	38.6	13.87	6.11	40.0	13.94	6.52	40.3	14.00	6.98	40.5	14.00	7.46	40.6	14.00	7.84	25.4	14.00	8.23	25.4	14.00	8.77	20.4			
	-15	13.86	4.91	39.9	13.78	5.23	39.7	13.70	5.59	39.5	13.85	6.10	40.0	14.00	6.67	40.5	14.00	7.08	40.6	14.00	7.35	25.4	14.00	7.71	25.4	14.00	8.17	20.4	14.00	8.49	20.4
	-10	12.00	4.20	34.5	12.56	4.70	36.1	13.11	5.29	37.8	13.45	5.85	38.8	13.79	6.51	39.9	13.89	6.94	40.3	13.96	7.27	25.3	13.96	7.61	25.4	13.97	8.08	20.3	13.40	8.09	19.6
	-7	12.53	4.08	36.0	12.87	4.50	37.0	13.20	4.98	38.1	13.55	5.56	39.1	13.89	6.25	40.2	13.94	6.76	40.4	13.97	7.17	25.3	13.97	7.43	25.4	13.97	7.78	20.3	13.30	7.59	19.4
	-2	11.82	3.67	34.0	12.11	4.02	34.9	12.40	4.42	35.8	12.74	4.96	36.8	13.07	5.62	37.8	13.61	6.03	39.5	13.98	6.34	25.4	13.86	6.77	25.2	13.70	7.27	19.9	13.50	7.37	19.7
	2	11.52	2.73	33.1	11.71	3.09	33.7	11.90	3.55	34.3	12.42	4.09	35.9	12.94	4.76	37.4	13.27	5.18	38.5	13.50	5.51	24.5	13.59	5.99	24.7	13.71	6.71	20.0	13.50	7.10	19.7
	7	14.00	2.24	40.3	14.00	2.48	40.3	14.00	2.77	40.4	14.00	3.11	40.4	14.00	3.54	40.5	14.00	3.85	40.6	14.00	4.18	25.4	14.80	4.90	26.9	15.70	5.88	22.9	16.30	6.78	23.8
	12	14.49	1.89	41.7	14.54	2.17	41.9	14.59	2.52	42.1	14.65	2.89	42.3	14.70	3.38	42.5	14.76	3.82	42.8	14.81	4.21	26.9	15.55	4.83	28.3	16.38	5.77	23.9	16.95	6.61	24.7
	15	14.78	1.76	42.5	14.86	2.03	42.8	14.95	2.39	43.1	15.04	2.75	43.4	15.12	3.23	43.7	15.21	3.67	44.1	15.30	4.07	27.7	16.01	4.67	29.1	16.79	5.58	24.4	17.34	6.36	25.3
	20	15.26	1.59	43.9	15.40	1.83	44.3	15.55	2.15	44.8	15.69	2.42	45.3	15.83	2.84	45.8	15.97	3.34	46.3	16.11	3.81	29.2	16.76	4.38	30.5	17.48	5.24	25.5	18.00	6.27	26.3
	25	15.75	1.50	45.3	15.95	1.71	45.9	16.14	1.99	46.5	16.34	2.29	47.2	16.53	2.67	47.8	16.73	3.15	48.5	16.92	3.61	30.7	17.52	4.14	31.8	18.16	4.97	26.4	18.65	6.19	27.2
	30	16.24	1.49	46.7	16.49	1.70	47.5	16.73	1.98	48.2	16.98	2.21	49.0	17.23	2.49	49.9	17.48	2.94	50.7	17.73	3.37	32.2	18.27	3.87	33.2	18.84	4.66	27.4	19.30	5.88	28.2
	35	16.72	1.48	48.1	17.03	1.66	49.0	17.33	1.88	50.0	17.63	2.09	50.9	17.91	2.35	51.8	18.24	2.77	52.9	18.54	3.17	33.6	19.02	3.65	34.6	19.53	4.42	28.4	19.96	5.62	29.1
	43	17.5	1.48	50.3	17.9	1.62	51.5	18.3	1.79	52.7	18.7	2	53.9	19.1	2.26	55.1	19.5	2.64	56.4	19.8	3	36.0	20.2	3.46	36.8	20.6	4.21	30.0	21	5.16	30.7

1. Heating capacity
   - Capacity is according to EN14511.
   - Valid for heated water range (ΔT = Leaving water temperature - Entering water temperature)
   : If LWT≤50°C, ΔT=5°C or 50°C<LWT≤60°C , ΔT=8°C or LWT>60°C, ΔT=10°C, within the minimum ~ maximum water flow rate.
2. Cooling capacity
   - Capacity is according to EN14511
   - Valid for Cooling water range (ΔT =Entering water temperature - Leaving water temperature)
   : ΔT=5°C, within the minimum ~ maximum water flow rate.
3. Power input : Power input is according to EN1451
4. Peak value : Tested without defrost operation in accordance with EN14511.

※ The real capacity would be changed according to the install environment.

2. Outdoor Units

2-9. Capacity table

EHS Mono HT Quiet

3) Cooling Capacity

LWT (Leaving Water Temp.), Tamb (Ambient Temp.), CC (Cooling Capacity), PI (Power input), WF (Water Flow)

	LWT(°C)	7			10			13			15			18			25		
	Tamb(°C)	CC (kW)	PI (kW)	WF(LPM)	CC (kW)	PI (kW)	WF(LPM)	CC (kW)	PI (kW)	WF(LPM)	CC (kW)	PI (kW)	WF(LPM)	CC (kW)	PI (kW)	WF(LPM)	CC (kW)	PI (kW)	WF(LPM)
AE080BXYD*G/EU	10	8.30	1.09	23.8	8.52	1.09	24.5	8.75	0.99	25.2	8.88	0.98	25.5	9.33	0.96	26.8	10.26	1.01	29.6
	20	7.99	1.34	22.9	8.20	1.20	23.6	8.42	1.19	24.2	8.54	1.09	24.6	8.97	1.06	25.8	9.87	1.04	28.5
	30	7.67	1.91	22.0	7.87	1.78	22.6	8.08	1.65	23.2	8.20	1.58	23.6	8.61	1.48	24.8	9.47	1.41	27.3
	35	7.50	2.27	21.5	7.62	2.10	21.9	7.75	2.01	22.3	7.86	1.82	22.6	8.00	1.70	23.1	9.18	1.59	26.5
	46	7.00	3.00	20.1	7.12	2.78	20.5	7.31	2.61	21.0	7.33	2.49	21.1	7.79	2.43	22.4	8.66	2.07	25.0
	LWT(°C)	7			10			13			15			18			25		
	Tamb(°C)	CC (kW)	PI (kW)	WF(LPM)	CC (kW)	PI (kW)	WF(LPM)	CC (kW)	PI (kW)	WF(LPM)	CC (kW)	PI (kW)	WF(LPM)	CC (kW)	PI (kW)	WF(LPM)	CC (kW)	PI (kW)	WF(LPM)
AE120BXYD*G/EU	10	12.73	1.67	36.6	13.00	1.66	37.4	13.27	1.55	38.2	13.40	1.44	38.5	13.99	1.42	40.3	15.39	1.51	44.4
	20	12.25	2.07	35.2	12.51	1.83	35.9	12.77	1.80	36.7	12.89	1.64	37.1	13.46	1.56	38.7	14.81	1.56	42.7
	30	11.75	3.19	33.8	12.01	2.93	34.5	12.25	2.71	35.2	12.37	2.64	35.6	12.91	2.48	37.2	14.21	2.27	41.0
	35	11.50	3.59	33.0	11.63	3.42	33.4	11.75	3.26	33.8	11.86	2.96	34.1	12.00	2.64	34.6	13.76	2.59	39.7
	46	10.73	4.60	30.8	10.87	4.34	31.2	11.08	4.13	31.9	11.06	4.01	31.8	11.69	3.90	33.6	12.98	3.51	37.4
	LWT(°C)	7			10			13			15			18			25		
	Tamb(°C)	CC (kW)	PI (kW)	WF(LPM)	CC (kW)	PI (kW)	WF(LPM)	CC (kW)	PI (kW)	WF(LPM)	CC (kW)	PI (kW)	WF(LPM)	CC (kW)	PI (kW)	WF(LPM)	CC (kW)	PI (kW)	WF(LPM)
AE140BXYD*G/EU	10	13.84	1.94	39.7	14.31	1.85	41.1	14.91	1.76	42.9	15.36	1.71	44.2	16.32	1.68	47.0	17.96	1.76	51.8
	20	13.31	2.24	38.2	13.77	2.01	39.6	14.34	2.03	41.2	14.78	1.88	42.5	15.71	1.85	45.2	17.28	1.81	49.8
	30	12.78	3.86	36.7	13.21	3.43	38.0	13.77	3.13	39.6	14.18	3.03	40.8	15.06	2.79	43.4	16.58	2.83	47.8
	35	12.50	3.97	35.9	12.80	3.83	36.8	13.20	3.74	37.9	13.60	3.44	39.1	14.00	3.14	40.4	16.06	3.10	46.3
	46	11.67	5.10	33.5	11.96	4.82	34.4	12.45	4.66	35.8	12.69	4.60	36.5	13.63	4.52	39.2	15.15	4.03	43.7

1. Heating capacity : Capacity is according to Eurovent rating standard OM-3-2015 and valid for heated water range △t = 3~8°C (However, if the LWT is over 60°C, △t = 10°C.)
2. Cooling capacity : Capacity is according to Eurovent rating standard OM-3-2015 and valid for chilled water range △t = 3~8°C
3. Power input : Power input is according to Eurovent rating standard OM-3-2015.
4. Peak value : Tested without defrost operation in accordance with EN14511

※ The real capacity would be changed according to the install environment.

2. Outdoor Units

2-9. Capacity table

EHS Mono R32

1) Maximum Heating Capacity (Peak Value)

LWT (Leaving Water Temp.), Tamb (Ambient Temp.), HC (Heating Capacity), PI (Power input), WF (Water Flow)

	LWT(°C)	25			30			35			40			45			50			55			60			65		
	Tamb(°C)	HC(kW)	PI(kW)	WF(LPM)	HC(kW)	PI(kW)	WF(LPM)	HC(kW)	PI(kW)	WF(LPM)	HC(kW)	PI(kW)	WF(LPM)	HC(kW)	PI(kW)	WF(LPM)	HC(kW)	PI(kW)	WF(LPM)	HC(kW)	PI(kW)	WF(LPM)	HC(kW)	PI(kW)	WF(LPM)	HC(kW)	PI(kW)	WF(LPM)
AE050RXYDEG/EU	-25	2.80	1.35	8.1	2.75	1.42	7.9	2.62	1.56	7.6	2.69	1.60	7.8															
	-20	3.64	1.43	10.5	3.57	1.50	10.3	3.40	1.66	9.8	3.41	1.71	9.8	3.43	1.98	9.9												
	-15	4.56	1.63	13.1	4.47	1.71	12.9	4.26	1.90	12.3	4.12	1.94	11.9	3.99	2.00	11.5	3.87	2.10	11.2									
	-10	5.35	1.67	15.4	5.25	1.73	15.1	5.00	1.94	14.4	4.85	2.00	14.0	4.70	2.08	13.6	4.56	2.20	13.2	4.23	2.44	7.7						
	-7	5.68	1.69	16.3	5.58	1.74	16.1	5.31	1.96	15.3	5.20	2.17	15.0	5.08	2.40	14.7	4.97	2.68	14.4	4.86	2.91	8.8						
	-2	6.01	1.62	17.3	5.91	1.68	17.0	5.63	1.89	16.2	5.41	2.08	15.6	5.20	2.26	15.0	4.94	2.54	14.3	4.68	2.77	8.5	4.43	3.05	8.1			
	2	5.96	1.41	17.1	5.86	1.50	16.9	5.58	1.69	16.1	5.27	1.78	15.2	4.97	1.83	14.4	4.72	2.02	13.7	4.47	2.15	8.1	4.23	2.35	7.7			
	7	5.36	0.89	15.4	5.25	0.92	15.1	5.00	1.03	14.4	4.90	1.22	14.2	4.80	1.30	13.9	4.55	1.55	13.2	4.30	1.52	7.8	4.08	1.79	7.4	3.85	1.84	7.0
	10	5.73	0.92	16.5	5.62	0.95	16.2	5.35	1.07	15.4	5.27	1.21	15.2	5.24	1.38	15.2	4.98	1.55	14.4	4.72	1.80	8.6	4.48	1.86	8.1	4.29	1.97	7.0
	15	6.34	0.96	18.2	6.22	0.99	17.9	5.92	1.11	17.1	5.87	1.23	17.0	5.93	1.42	17.2	5.64	1.60	16.4	5.45	1.81	9.9	5.18	1.87	9.4	4.95	1.94	7.2
	20	6.90	0.99	19.8	6.76	1.02	19.5	6.58	1.16	19.0	6.69	1.31	19.3	6.80	1.49	19.7	6.46	1.66	18.7	6.18	1.82	11.2	5.93	1.86	10.8	5.62	1.88	8.2
	25	7.13	1.02	20.5	6.99	1.07	20.1	6.81	1.22	19.6	6.95	1.34	20.1	7.15	1.57	20.7	6.80	1.70	19.7	6.56	1.96	11.9	6.29	1.90	11.4	5.99	1.92	8.7
	30	7.29	1.04	21.0	7.15	1.09	20.6	6.99	1.24	20.2	7.20	1.34	20.8	7.46	1.61	21.6	7.09	1.71	20.6	6.86	2.02	12.4	6.60	1.88	12.0	6.28	1.88	9.1
	35	7.82	1.11	22.5	7.67	1.17	22.1	7.54	1.33	21.7	7.81	1.42	22.6	8.14	1.73	23.6	7.75	1.81	22.5	7.52	2.18	13.6	7.24	1.97	13.2	6.89	1.95	10.0
	LWT(°C)	25			30			35			40			45			50			55			60			65		
	Tamb(°C)	HC(kW)	PI(kW)	WF(LPM)	HC(kW)	PI(kW)	WF(LPM)	HC(kW)	PI(kW)	WF(LPM)	HC(kW)	PI(kW)	WF(LPM)	HC(kW)	PI(kW)	WF(LPM)	HC(kW)	PI(kW)	WF(LPM)	HC(kW)	PI(kW)	WF(LPM)	HC(kW)	PI(kW)	WF(LPM)	HC(kW)	PI(kW)	WF(LPM)
AE080RXYD*G/EU	-25	4.39	2.03	12.6	4.31	2.14	12.4	4.10	2.37	11.8	4.14	2.55	11.9															
	-20	5.71	2.22	16.4	5.60	2.32	16.1	5.33	2.57	15.4	5.27	2.74	15.2	5.20	3.13	15.0												
	-15	6.69	2.43	19.2	6.56	2.54	18.9	6.25	2.82	18.0	6.15	2.98	17.8	6.06	3.16	17.5	5.88	3.32	17.0									
	-10	8.12	2.61	23.4	8.02	2.71	23.1	7.64	3.01	22.0	7.41	3.15	21.4	7.18	3.31	20.8	7.11	3.52	20.6	6.75	4.15	12.2						
	-7	8.15	2.69	23.4	8.04	2.80	23.1	7.80	2.95	22.5	7.43	3.25	21.5	7.27	3.40	21.0	7.15	3.73	20.7	6.80	4.01	12.3						
	-2	8.7	2.54	25.0	8.56	2.72	24.6	8.15	2.90	23.5	7.89	3.21	22.8	7.62	3.38	22.0	7.24	3.80	21.0	6.86	4.10	12.4	6.50	4.45	11.8			
	2	8.82	2.25	25.4	8.55	2.43	24.6	8.14	2.73	23.5	7.85	2.89	22.7	7.56	2.98	21.9	7.18	3.28	20.8	6.80	3.58	12.3	6.44	3.95	11.7			
	7	8.57	1.53	24.6	8.40	1.58	24.2	8.00	1.77	23.1	7.70	2.04	22.2	7.40	2.12	21.4	7.25	2.56	21.0	7.10	2.53	12.9	6.96	3.02	12.7	6.81	3.12	9.9
	10	9.22	1.58	26.5	9.04	1.62	26.0	8.61	1.82	24.8	8.36	2.02	24.1	8.19	2.27	23.7	7.78	2.56	22.6	7.37	2.98	13.4	7.01	3.07	12.7	6.70	3.25	9.8
	15	10.27	1.60	29.5	10.07	1.64	29.0	9.59	1.85	27.7	9.42	2.07	27.2	9.45	2.40	27.3	8.97	2.70	26.0	8.68	3.06	15.7	8.24	3.15	15.0	7.89	3.28	11.5
	20	11.24	1.64	32.3	11.02	1.67	31.7	10.73	1.89	30.9	10.85	2.20	31.3	10.98	2.55	31.8	10.43	2.84	30.2	9.98	3.13	18.1	9.58	3.20	17.4	9.07	3.24	13.2
	25	11.68	1.66	33.6	19.43	2.61	55.9	18.02	2.78	52.0	17.65	2.98	51.0	16.94	3.16	49.0	16.09	3.53	46.7	15.21	3.92	27.6	14.37	4.00	26.1	13.92	4.07	20.3
	30	11.99	1.68	34.5	20.37	2.65	58.6	18.84	2.82	54.3	18.43	3.02	53.2	17.59	3.19	50.9	16.66	3.57	48.3	15.68	3.96	28.4	14.71	4.04	26.7	14.33	4.11	20.9
	35	12.91	1.75	37.1	22.33	2.67	64.3	20.60	2.86	59.4	20.14	3.06	58.2	19.13	3.24	55.4	18.07	3.62	52.4	16.95	4.01	30.7	15.80	4.09	28.7	15.47	4.16	22.5
	LWT(°C)	25			30			35			40			45			50			55			60			65		
	Tamb(°C)	HC(kW)	PI(kW)	WF(LPM)	HC(kW)	PI(kW)	WF(LPM)	HC(kW)	PI(kW)	WF(LPM)	HC(kW)	PI(kW)	WF(LPM)	HC(kW)	PI(kW)	WF(LPM)	HC(kW)	PI(kW)	WF(LPM)	HC(kW)	PI(kW)	WF(LPM)	HC(kW)	PI(kW)	WF(LPM)	HC(kW)	PI(kW)	WF(LPM)
AE120RXYD*G/EU	-25	8.60	4.19	24.7	4.31	2.14	12.4	4.10	2.37	11.8	4.14	2.55	11.9															
	-20	10.02	4.17	28.8	9.82	4.36	28.3	9.35	4.81	27.0	9.04	4.91	26.1	8.72	4.88	25.2												
	-15	11.02	4.19	31.7	10.80	4.38	31.1	10.49	4.87	30.2	10.33	4.98	29.8	10.16	4.98	29.4	9.85	5.23	28.6									
	-10	12.59	4.14	36.2	12.39	4.32	35.7	12.20	4.88	35.2	11.65	5.04	33.6	11.46	5.23	33.2	11.39	5.49	33.0	11.37	5.72	20.6						
	-7	13.35	4.2	38.4	13.13	4.37	37.8	12.56	4.61	36.2	11.95	5.39	34.5	11.40	5.88	33.0	11.04	6.31	32.0	10.28	6.65	18.6						
	-2	13.81	3.95	39.7	13.60	4.05	39.2	12.95	4.55	37.3	12.72	5.09	36.7	12.48	5.62	36.1	12.25	6.32	35.5	11.83	7.02	21.5	11.14	7.80	20.2			
	2	13.38	3.24	38.5	13.19	3.42	38.0	12.75	3.84	36.8	12.41	4.39	35.8	12.21	4.94	35.3	12.07	5.56	35.0	11.53	6.18	20.9	10.93	6.56	19.9			
	7	12.85	2.48	37.0	12.60	2.57	36.3	12.00	2.65	34.6	11.85	3.06	34.2	11.70	3.18	33.9	11.50	3.46	33.3	11.30	3.73	20.5	11.11	4.06	20.2	10.48	4.53	15.3
	10	14.19	2.47	40.8	13.91	2.55	40.1	12.98	2.76	37.4	12.79	3.03	36.9	12.61	3.26	36.5	11.98	3.67	34.7	11.35	4.16	20.6	11.00	4.45	20.0	10.42	4.71	15.2
	15	16.41	2.45	47.2	16.09	2.51	46.3	15.02	2.72	43.3	14.76	2.93	42.6	14.51	3.19	42.0	13.79	3.59	40.0	13.06	4.03	23.7	12.66	4.19	23.0	11.99	4.48	17.5
	20	18.64	2.45	53.6	18.27	2.50	52.6	17.05	2.68	49.2	16.73	2.88	48.3	16.08	3.06	46.5	15.44	3.44	44.8	14.77	3.83	26.8	14.03	3.91	25.5	13.57	3.98	19.8
	25	19.82	2.49	57.0	19.43	2.61	55.9	18.02	2.78	52.0	17.65	2.98	51.0	16.94	3.16	49.0	16.09	3.53	46.7	15.21	3.92	27.6	14.37	4.00	26.1	13.92	4.07	20.3
	30	20.78	2.52	59.8	20.37	2.65	58.6	18.84	2.82	54.3	18.43	3.02	53.2	17.59	3.19	50.9	16.66	3.57	48.3	15.68	3.96	28.4	14.71	4.04	26.7	14.33	4.11	20.9
	35	22.78	2.54	65.5	22.33	2.67	64.3	20.60	2.86	59.4	20.14	3.06	58.2	19.13	3.24	55.4	18.07	3.62	52.4	16.95	4.01	30.7	15.80	4.09	28.7	15.47	4.16	22.5
	LWT(°C)	25			30			35			40			45			50			55			60			65		
	Tamb(°C)	HC(kW)	PI(kW)	WF(LPM)	HC(kW)	PI(kW)	WF(LPM)	HC(kW)	PI(kW)	WF(LPM)	HC(kW)	PI(kW)	WF(LPM)	HC(kW)	PI(kW)	WF(LPM)	HC(kW)	PI(kW)	WF(LPM)	HC(kW)	PI(kW)	WF(LPM)	HC(kW)	PI(kW)	WF(LPM)	HC(kW)	PI(kW)	WF(LPM)
AE160RXYD*G/EU	-25	10.36	5.14	29.8	10.16	5.41	29.2	9.49	5.86	27.4	9.22	6.23	26.6															
	-20	12.11	5.17	34.8	11.87	5.40	34.2	11.30	5.95	32.6	10.99	6.34	31.7	10.68	6.61	30.9												
	-15	13.50	5.27	38.8	13.24	5.50	38.1	12.87	6.12	37.1	12.66	6.50	36.6	12.44	6.74	36.0	12.07	7.08	35.0									
	-10	16.04	5.27	46.1	15.12	5.47	43.5	14.80	6.21	42.7	14.47	6.61	41.8	14.23	7.18	41.2	14.06	7.43	40.8	13.98	7.81	25.4						
	-7	16.25	5.3	46.7	15.97	5.56	46.0	15.65	6.03	45.1	15.27	7.05	44.1	14.91	7.84	43.1	14.36	7.72	41.6	13.60	7.91	24.7						
	-2	16.78	5.14	48.3	16.59	5.26	47.8	15.80	5.91	45.6	15.24	6.42	44.0	14.69	6.93	42.5	13.95	7.79	40.4	13.22	8.66	24.0	12.52	9.62	22.8			
	2	16.42	4.17	47.2	16.12	4.55	46.4	15.35	5.12	44.3	14.15	5.27	40.9	12.95	5.42	37.5	12.31	6.10	35.7	11.66	6.77	21.1	11.04	7.19	20.1			
	7	17.14	3.40	49.3	16.80	3.51	48.4	16.00	3.62	46.2	15.70	4.26	45.3	15.40	4.49	44.6	15.20	4.84	44.1	15.00	5.18	27.2	14.81	5.60	26.9	14.03	6.19	20.4
	10	18.62	3.45	53.5	18.25	3.55	52.5	17.04	3.85	49.1	16.75	4.31	48.4	16.47	4.72	47.7	15.64	5.31	45.3	14.82	6.01	26.9	14.37	6.43	26.1	13.61	6.81	19.8
	15	21.09	3.54	60.7	20.68	3.63	59.5	19.30	3.92	55.6	19.03	4.32	55.0	18.76	4.80	54.3	17.82	5.40	51.7	16.88	6.05	30.6	16.37	6.30	29.8	15.50	6.74	22.6
	20	23.56	3.64	67.8	23.10	3.73	66.5	21.56	4.00	62.2	21.31	4.42	61.5	20.62	4.78	59.7	19.79	5.38	57.4	18.95	5.98	34.4	18.00	6.11	32.7	17.40	6.23	25.3
	25	24.73	3.67	71.1	24.25	3.86	69.8	22.48	4.14	64.8	22.26	4.56	64.3	21.58	4.92	62.4	20.45	5.53	59.3	19.31	6.13	35.0	18.21	6.25	33.1	17.61	6.37	25.6
	30	25.66	3.71	73.8	25.15	3.90	72.4	23.25	4.18	67.0	23.06	4.60	66.6	22.28	4.97	64.5	21.03	5.58	61.0	19.76	6.19	35.8	18.48	6.31	33.6	17.96	6.43	26.2
	35	27.88	3.75	80.2	27.34	3.94	78.7	25.19	4.22	72.6	25.02	4.65	72.3	24.12	5.02	69.8	22.68	5.64	65.8	21.23	6.26	38.5	19.71	6.39	35.8	19.24	6.51	28.0

1. Heating capacity
   - Capacity is according to EN14511.
   - Valid for heated water range (ΔT = Leaving water temperature - Entering water temperature)
   : If LWT≤50°C, ΔT=5°C or 50°C<LWT≤60°C , ΔT=8°C or LWT>60°C, ΔT=10°C, within the minimum ~ maximum water flow rate.
2. Cooling capacity
   - Capacity is according to EN14511
   - Valid for Cooling water range (ΔT =Entering water temperature - Leaving water temperature)
   : ΔT=5°C, within the minimum ~ maximum water flow rate.
3. Power input : Power input is according to EN1451
4. Peak value : Tested without defrost operation in accordance with EN14511.

※ The real capacity would be changed according to the install environment.

2. Outdoor Units

2-9. Capacity table

EHS Mono R32

2) Maximum Heating Capacity (Integrated Value)

LWT (Leaving Water Temp.), Tamb (Ambient Temp.), HC (Heating Capacity), PI (Power input), WF (Water Flow)

	LWT(℃)	25			30			35			40			45			50			55			60			65		
	Tamb(℃)	HC(kW)	PI(kW)	WF(LPM)	HC(kW)	PI(kW)	WF(LPM)	HC(kW)	PI(kW)	WF(LPM)	HC(kW)	PI(kW)	WF(LPM)	HC(kW)	PI(kW)	WF(LPM)	HC(kW)	PI(kW)	WF(LPM)	HC(kW)	PI(kW)	WF(LPM)	HC(kW)	PI(kW)	WF(LPM)	HC(kW)	PI(kW)	WF(LPM)
AE050RXYDEG/EU	-25	2.80	1.35	8.1	2.75	1.42	7.9	2.62	1.56	7.6	2.69	1.60	7.8															
	-20	3.64	1.43	10.5	3.57	1.50	10.3	3.40	1.66	9.8	3.41	1.71	9.8	3.43	1.98	9.9												
	-15	4.56	1.63	13.1	4.47	1.71	12.9	4.26	1.90	12.3	4.12	1.94	11.9	3.99	2.00	11.5	3.87	2.10	11.2									
	-10	4.99	1.62	14.3	4.89	1.69	14.1	4.66	1.90	13.4	4.80	1.99	13.9	4.65	2.08	13.5	4.47	2.18	13.0	4.15	2.39	7.5						
	-7	5.19	1.60	14.9	5.09	1.67	14.7	4.90	1.69	14.1	5.04	2.12	14.6	4.93	2.36	14.3	4.78	2.58	13.9	4.67	2.79	8.5						
	-2	5.04	1.39	14.5	4.94	1.45	14.2	4.75	1.63	13.7	4.67	1.83	13.5	4.44	1.95	12.8	4.26	2.19	12.4	4.08	2.44	7.4	3.86	2.71	7.0			
	2	4.89	1.18	14.1	4.79	1.23	13.8	4.56	1.38	13.1	4.35	1.50	12.6	4.12	1.54	11.9	3.98	1.73	11.5	3.80	1.92	6.9	3.64	2.14	6.6			
	7	5.36	0.89	15.4	5.25	0.92	15.1	5.00	1.03	14.4	4.90	1.22	14.2	4.80	1.30	13.9	4.55	1.55	13.2	4.30	1.52	7.8	4.08	1.79	7.4	3.85	1.84	7.0
	10	5.73	0.92	16.5	5.62	0.95	16.2	5.35	1.07	15.4	5.27	1.21	15.2	5.24	1.38	15.2	4.98	1.55	14.4	4.72	1.80	8.6	4.48	1.86	8.1	4.29	1.97	7.0
	15	6.34	0.96	18.2	6.22	0.99	17.9	5.92	1.11	17.1	5.87	1.23	17.0	5.93	1.42	17.2	5.64	1.60	16.4	5.45	1.81	9.9	5.18	1.87	9.4	4.95	1.94	7.2
	20	6.90	0.99	19.8	6.76	1.02	19.5	6.58	1.16	19.0	6.69	1.31	19.3	6.80	1.49	19.7	6.46	1.66	18.7	6.18	1.82	11.2	5.93	1.86	10.8	5.62	1.88	8.2
	25	7.13	1.02	20.5	6.99	1.07	20.1	6.81	1.22	19.6	6.95	1.34	20.1	7.15	1.57	20.7	6.80	1.70	19.7	6.56	1.96	11.9	6.29	1.90	11.4	5.99	1.92	8.7
	30	7.29	1.04	21.0	7.15	1.09	20.6	6.99	1.24	20.2	7.20	1.34	20.8	7.46	1.61	21.6	7.09	1.71	20.6	6.86	2.02	12.4	6.60	1.88	12.0	6.28	1.88	9.1
	35	7.82	1.11	22.5	7.67	1.17	22.1	7.54	1.33	21.7	7.81	1.42	22.6	8.14	1.73	23.6	7.75	1.81	22.5	7.52	2.18	13.6	7.24	1.97	13.2	6.89	1.95	10.0
	LWT(℃)	25			30			35			40			45			50			55			60			65		
	Tamb(℃)	HC(kW)	PI(kW)	WF(LPM)	HC(kW)	PI(kW)	WF(LPM)	HC(kW)	PI(kW)	WF(LPM)	HC(kW)	PI(kW)	WF(LPM)	HC(kW)	PI(kW)	WF(LPM)	HC(kW)	PI(kW)	WF(LPM)	HC(kW)	PI(kW)	WF(LPM)	HC(kW)	PI(kW)	WF(LPM)	HC(kW)	PI(kW)	WF(LPM)
AE080RXYD*G/EU	-25	4.39	2.03	12.6	4.31	2.14	12.4	4.10	2.37	11.8	4.14	2.55	11.9															
	-20	5.71	2.22	16.4	5.60	2.32	16.1	5.33	2.57	15.4	5.27	2.74	15.2	5.20	3.13	15.0												
	-15	6.69	2.43	19.2	6.56	2.54	18.9	6.25	2.82	18.0	6.15	2.98	17.8	6.06	3.16	17.5	5.88	3.32	17.0									
	-10	7.62	2.55	21.9	7.47	2.66	21.5	7.11	2.99	20.5	7.34	3.14	21.2	7.11	3.28	20.6	6.69	3.45	19.4	6.65	4.10	12.1						
	-7	7.48	2.58	21.5	7.33	2.69	21.1	7.06	2.72	20.4	7.20	3.17	20.8	6.98	3.32	20.2	6.93	3.73	20.1	6.00	3.97	10.9						
	-2	7.30	2.25	21.0	7.16	2.34	20.6	6.89	2.63	19.9	6.80	2.83	19.6	6.50	2.91	18.8	6.24	3.27	18.1	5.97	3.64	10.8	5.66	4.04	10.3			
	2	7.12	1.91	20.5	6.98	1.99	20.1	6.65	2.23	19.2	6.48	2.44	18.7	6.27	2.49	18.1	6.05	2.80	17.5	5.79	3.11	10.5	5.54	3.46	10.1			
	7	8.57	1.53	24.6	8.40	1.58	24.2	8.00	1.77	23.1	7.70	2.04	22.2	7.40	2.12	21.4	7.25	2.56	21.0	7.10	2.53	12.9	6.96	3.02	12.7	6.81	3.12	9.9
	10	9.22	1.58	26.5	9.04	1.62	26.0	8.61	1.82	24.8	8.36	2.02	24.1	8.19	2.27	23.7	7.78	2.56	22.6	7.37	2.98	13.4	7.01	3.07	12.7	6.70	3.25	9.8
	15	10.27	1.60	29.5	10.07	1.64	29.0	9.59	1.85	27.7	9.42	2.07	27.2	9.45	2.40	27.3	8.97	2.70	26.0	8.68	3.06	15.7	8.24	3.15	15.0	7.89	3.28	11.5
	20	11.24	1.64	32.3	11.02	1.67	31.7	10.73	1.89	30.9	10.85	2.20	31.3	10.98	2.55	31.8	10.43	2.84	30.2	9.98	3.13	18.1	9.58	3.20	17.4	9.07	3.24	13.2
	25	11.68	1.66	33.6	11.45	1.74	33.0	11.15	1.97	32.2	11.36	2.27	32.8	11.67	2.75	33.8	10.98	2.96	31.8	10.49	3.42	19.0	9.96	3.29	18.1	9.37	3.32	13.6
	30	11.99	1.68	34.5	11.75	1.76	33.8	11.50	2.00	33.2	11.84	2.31	34.2	12.29	2.88	35.6	11.51	3.05	33.4	10.97	3.58	19.9	10.39	3.33	18.9	9.71	3.33	14.1
	35	12.91	1.75	37.1	12.66	1.83	36.5	12.44	2.09	35.9	12.92	2.43	37.3	13.52	3.11	39.1	12.62	3.23	36.6	12.00	3.86	21.8	11.35	3.47	20.6	10.56	3.44	15.4
	LWT(℃)	25			30			35			40			45			50			55			60			65		
	Tamb(℃)	HC(kW)	PI(kW)	WF(LPM)	HC(kW)	PI(kW)	WF(LPM)	HC(kW)	PI(kW)	WF(LPM)	HC(kW)	PI(kW)	WF(LPM)	HC(kW)	PI(kW)	WF(LPM)	HC(kW)	PI(kW)	WF(LPM)	HC(kW)	PI(kW)	WF(LPM)	HC(kW)	PI(kW)	WF(LPM)	HC(kW)	PI(kW)	WF(LPM)
AE120RXYD*G/EU	-25	8.60	4.19	24.7	4.31	2.14	12.4	4.10	2.37	11.8	4.14	2.55	11.9															
	-20	10.02	4.17	28.8	9.82	4.36	28.3	9.35	4.81	27.0	9.04	4.91	26.1	8.72	4.88	25.2												
	-15	11.02	4.19	31.7	10.80	4.38	31.1	10.49	4.87	30.2	10.33	4.98	29.8	10.16	4.98	29.4	9.85	5.23	28.6									
	-10	12.02	4.05	34.6	11.78	4.23	33.9	11.80	4.85	34.0	11.44	4.99	33.0	11.30	5.23	32.7	11.28	5.49	32.7	11.25	5.72	20.4						
	-7	12.21	4.02	35.1	11.97	4.19	34.5	11.64	4.33	33.6	11.07	5.18	32.0	10.50	5.64	30.4	10.61	6.11	30.8	10.07	6.57	18.3						
	-2	11.72	3.42	33.7	11.49	3.56	33.1	11.06	4.01	31.9	10.97	4.48	31.7	10.76	4.95	31.1	10.43	5.62	30.2	9.88	6.24	17.9	9.36	7.01	17.0			
	2	11.33	2.82	32.6	11.11	2.94	32.0	10.58	3.30	30.5	10.80	3.78	31.2	10.91	4.25	31.6	10.47	4.83	30.4	9.92	5.31	18.0	9.40	6.02	17.1			
	7	12.85	2.48	37.0	12.60	2.57	36.3	12.00	2.65	34.6	11.85	3.06	34.2	11.70	3.18	33.9	11.50	3.46	33.3	11.30	3.73	20.5	11.11	4.06	20.2	10.48	4.53	15.3
	10	14.19	2.47	40.8	13.91	2.55	40.1	12.98	2.76	37.4	12.79	3.03	36.9	12.61	3.26	36.5	11.98	3.67	34.7	11.35	4.16	20.6	11.00	4.45	20.0	10.42	4.71	15.2
	15	16.41	2.45	47.2	16.09	2.51	46.3	15.02	2.72	43.3	14.76	2.93	42.6	14.51	3.19	42.0	13.79	3.59	40.0	13.06	4.03	23.7	12.66	4.19	23.0	11.99	4.48	17.5
	20	18.64	2.45	53.6	18.27	2.50	52.6	17.05	2.68	49.2	16.73	2.88	48.3	16.08	3.06	46.5	15.44	3.44	44.8	14.77	3.83	26.8	14.03	3.91	25.5	13.57	3.98	19.8
	25	19.82	2.49	57.0	19.43	2.61	55.9	18.02	2.78	52.0	17.65	2.98	51.0	16.94	3.16	49.0	16.09	3.53	46.7	15.21	3.92	27.6	14.37	4.00	26.1	13.92	4.07	20.3
	30	20.78	2.52	59.8	20.37	2.65	58.6	18.84	2.82	54.3	18.43	3.02	53.2	17.59	3.19	50.9	16.66	3.57	48.3	15.68	3.96	28.4	14.71	4.04	26.7	14.33	4.11	20.9
	35	22.78	2.54	65.5	22.33	2.67	64.3	20.60	2.86	59.4	20.14	3.06	58.2	19.13	3.24	55.4	18.07	3.62	52.4	16.95	4.01	30.7	15.80	4.09	28.7	15.47	4.16	22.5
	LWT(℃)	25			30			35			40			45			50			55			60			65		
	Tamb(℃)	HC(kW)	PI(kW)	WF(LPM)	HC(kW)	PI(kW)	WF(LPM)	HC(kW)	PI(kW)	WF(LPM)	HC(kW)	PI(kW)	WF(LPM)	HC(kW)	PI(kW)	WF(LPM)	HC(kW)	PI(kW)	WF(LPM)	HC(kW)	PI(kW)	WF(LPM)	HC(kW)	PI(kW)	WF(LPM)	HC(kW)	PI(kW)	WF(LPM)
AE160RXYD*G/EU	-25	10.36	5.14	29.8	10.16	5.41	29.2	9.49	5.86	27.4	9.22	6.23	26.6															
	-20	12.11	5.17	34.8	11.87	5.40	34.2	11.30	5.95	32.6	10.99	6.34	31.7	10.68	6.61	30.9												
	-15	13.50	5.27	38.8	13.24	5.50	38.1	12.87	6.12	37.1	12.66	6.50	36.6	12.44	6.74	36.0	12.07	7.08	35.0									
	-10	15.42	5.25	44.4	14.37	5.36	41.4	14.39	6.15	41.5	13.96	6.55	40.3	13.80	7.07	39.9	13.77	7.43	39.9	13.73	7.74	24.9						
	-7	14.85	5.12	42.7	14.56	5.34	41.9	14.16	5.52	40.8	14.14	6.77	40.8	14.12	7.53	40.9	14.06	7.64	40.8	13.12	7.75	23.8						
	-2	14.29	4.45	41.1	14.01	4.63	40.3	13.48	5.20	38.9	13.14	5.65	37.9	12.67	6.10	36.7	12.28	6.93	35.6	11.63	7.69	21.1	11.02	8.63	20.0			
	2	13.85	3.77	39.8	13.58	3.92	39.1	12.94	4.40	37.3	12.05	4.53	34.8	11.03	4.66	31.9	10.58	5.29	30.7	10.03	5.83	18.2	9.50	6.60	17.3			
	7	17.14	3.40	49.3	16.80	3.51	48.4	16.00	3.62	46.2	15.70	4.26	45.3	15.40	4.49	44.6	15.20	4.84	44.1	15.00	5.18	27.2	14.81	5.60	26.9	14.03	6.19	20.4
	10	18.62	3.45	53.5	18.25	3.55	52.5	17.04	3.85	49.1	16.75	4.31	48.4	16.47	4.72	47.7	15.64	5.31	45.3	14.82	6.01	26.9	14.37	6.43	26.1	13.61	6.81	19.8
	15	21.09	3.54	60.7	20.68	3.63	59.5	19.30	3.92	55.6	19.03	4.32	55.0	18.76	4.80	54.3	17.82	5.40	51.7	16.88	6.05	30.6	16.37	6.30	29.8	15.50	6.74	22.6
	20	23.56	3.64	67.8	23.10	3.73	66.5	21.56	4.00	62.2	21.31	4.42	61.5	20.62	4.78	59.7	19.79	5.38	57.4	18.95	5.98	34.4	18.00	6.11	32.7	17.40	6.23	25.3
	25	24.73	3.67	71.1	24.25	3.86	69.8	22.48	4.14	64.8	22.26	4.56	64.3	21.58	4.92	62.4	20.45	5.53	59.3	19.31	6.13	35.0	18.21	6.25	33.1	17.61	6.37	25.6
	30	25.66	3.71	73.8	25.15	3.90	72.4	23.25	4.18	67.0	23.06	4.60	66.6	22.28	4.97	64.5	21.03	5.58	61.0	19.76	6.19	35.8	18.48	6.31	33.6	17.96	6.43	26.2
	35	27.88	3.75	80.2	27.34	3.94	78.7	25.19	4.22	72.6	25.02	4.65	72.3	24.12	5.02	69.8	22.68	5.64	65.8	21.23	6.26	38.5	19.71	6.39	35.8	19.24	6.51	28.0

1. Heating capacity
   - Capacity is according to EN14511.
   - Valid for heated water range (ΔT = Leaving water temperature - Entering water temperature)
   : If LWT≤50℃, ΔT=5℃ or 50℃<LWT≤60℃ , ΔT=8℃ or LWT>60℃, ΔT=10℃, within the minimum ~ maximum water flow rate.
2. Cooling capacity
   - Capacity is according to EN14511
   - Valid for Cooling water range (ΔT =Entering water temperature - Leaving water temperature)
   : ΔT=5℃, within the minimum ~ maximum water flow rate.
3. Power input : Power input is according to EN1451
4. Peak value : Tested without defrost operation in accordance with EN14511.

※ The real capacity would be changed according to the install environment.

2. Outdoor Units

2-9. Capacity table

EHS Mono R32

3) Cooling Capacity

LWT (Leaving Water Temp.), Tamb (Ambient Temp.), CC (Cooling Capacity), PI (Power input), WF (Water Flow)

	LWT(°C)	7			10			13			15			18			25		
	Tamb(°C)	HC(kW)	PI(kW)	WF(LPM)	HC(kW)	PI(kW)	WF(LPM)	HC(kW)	PI(kW)	WF(LPM)	HC(kW)	PI(kW)	WF(LPM)	HC(kW)	PI(kW)	WF(LPM)	HC(kW)	PI(kW)	WF(LPM)
AE050RXYDEG/EU	10	4.32	0.86	12.4	4.62	0.86	13.3	4.93	0.86	14.2	5.23	0.86	15.0	5.54	0.86	15.9	6.09	0.88	17.6
	20	4.15	0.98	11.9	4.45	0.98	12.8	4.74	0.98	13.6	5.03	0.98	14.5	5.33	0.98	15.3	5.86	1.00	16.9
	30	3.99	1.09	11.4	4.27	1.09	12.3	4.55	1.09	13.1	4.83	1.11	13.9	5.11	1.12	14.7	5.62	1.16	16.2
	35	3.90	1.15	11.2	4.05	1.18	11.6	4.32	1.24	12.4	4.58	1.24	13.2	5.00	1.14	14.4	5.33	1.20	15.4
	46	3.60	1.57	10.4	3.86	1.56	11.1	4.11	1.64	11.8	4.37	1.64	12.6	4.62	1.56	13.3	5.08	1.59	14.6
	LWT(°C)	7			10			13			15			18			25		
	Tamb(°C)	HC(kW)	PI(kW)	WF(LPM)	HC(kW)	PI(kW)	WF(LPM)	HC(kW)	PI(kW)	WF(LPM)	HC(kW)	PI(kW)	WF(LPM)	HC(kW)	PI(kW)	WF(LPM)	HC(kW)	PI(kW)	WF(LPM)
AE080RXYD*G/EU	10	6.31	1.42	18.1	6.92	1.35	19.9	7.53	1.29	21.6	8.14	1.22	23.4	8.75	1.15	25.2	9.62	1.18	27.7
	20	6.07	1.61	17.4	6.66	1.53	19.1	7.24	1.45	20.8	7.83	1.38	22.5	8.41	1.30	24.2	9.25	1.33	26.7
	30	5.83	1.79	16.7	6.39	1.71	18.4	6.95	1.62	20.0	7.51	1.57	21.6	8.07	1.49	23.2	8.88	1.55	25.6
	35	5.70	1.88	16.4	6.19	1.88	17.8	6.66	1.85	19.2	7.20	1.88	20.7	7.50	1.90	21.6	8.60	1.62	24.8
	46	5.32	2.36	15.3	5.78	2.42	16.6	6.29	2.47	18.1	6.72	2.48	19.3	7.30	2.40	21.0	8.11	2.48	23.4
	LWT(°C)	7			10			13			15			18			25		
	Tamb(°C)	HC(kW)	PI(kW)	WF(LPM)	HC(kW)	PI(kW)	WF(LPM)	HC(kW)	PI(kW)	WF(LPM)	HC(kW)	PI(kW)	WF(LPM)	HC(kW)	PI(kW)	WF(LPM)	HC(kW)	PI(kW)	WF(LPM)
AE120RXYD*G/EU	10	9.96	2.05	28.6	10.79	2.07	31.0	11.62	2.08	33.4	12.45	2.10	35.8	13.28	2.10	38.2	14.61	2.15	42.1
	20	9.59	2.33	27.5	10.38	2.35	29.8	11.18	2.35	32.1	11.98	2.37	34.5	12.78	2.38	36.8	14.06	2.44	40.5
	30	9.20	2.60	26.4	9.96	2.61	28.6	10.73	2.63	30.8	11.50	2.69	33.1	12.26	2.79	35.3	13.49	2.81	38.9
	35	9.00	2.73	25.9	9.46	2.83	27.2	10.18	3.00	29.3	10.91	3.00	31.4	12.00	2.77	34.6	12.80	2.91	36.9
	46	8.32	3.73	23.9	9.01	3.74	25.9	9.71	3.94	27.9	10.39	3.96	29.9	11.09	3.79	31.9	12.19	3.87	35.2
	LWT(°C)	7			10			13			15			18			25		
	Tamb(°C)	HC(kW)	PI(kW)	WF(LPM)	HC(kW)	PI(kW)	WF(LPM)	HC(kW)	PI(kW)	WF(LPM)	HC(kW)	PI(kW)	WF(LPM)	HC(kW)	PI(kW)	WF(LPM)	HC(kW)	PI(kW)	WF(LPM)
AE160RXYD*G/EU	10	11.51	2.48	33.1	12.51	2.49	35.9	13.51	2.49	38.8	14.50	2.50	41.7	15.50	2.50	44.6	17.05	2.56	49.2
	20	11.08	2.81	31.8	12.03	2.82	34.6	12.99	2.82	37.3	13.95	2.82	40.1	14.91	2.82	42.9	16.40	2.89	47.3
	30	10.63	3.14	30.5	11.55	3.14	33.2	12.47	3.14	35.8	13.39	3.20	38.5	14.31	3.24	41.2	15.74	3.34	45.4
	35	10.40	3.29	29.9	10.96	3.40	31.5	11.83	3.58	34.0	12.70	3.58	36.5	14.00	3.28	40.4	14.93	3.45	43.0
	46	9.61	4.49	27.6	10.44	4.49	30.0	11.28	4.71	32.4	12.10	4.72	34.8	12.93	4.49	37.2	14.23	4.60	41.0

1. Heating capacity : Capacity is according to Eurovent rating standard OM-3-2015 and valid for heated water range △t = 3~8°C
2. Cooling capacity : Capacity is according to Eurovent rating standard OM-3-2015 and valid for chilled water range △t = 3~8°C
3. Power input : Power input is according to Eurovent rating standard OM-3-2015.

※ The real capacity would be changed according to the install environment.

2. Outdoor Units

2-10. Silent mode corrections

EHS Mono R290

Heating

Silent Function	Outdoor Air Temperature(°C DB)			
	-15	2	7	15
Level 1	0.92	0.90	0.95	0.95
Level 2	0.82	0.80	0.86	0.86
Level 3	0.68	0.67	0.72	0.72
Low-noise	0.54	0.60	0.65	0.65

Cooling

Silent Function	Outdoor Air Temperature(°C DB)			
	10	20	35	45
Level 1	1.00	1.00	0.95	0.95
Level 2	0.98	0.98	0.86	0.86
Level 3	0.78	0.78	0.65	0.65
Low-noise	0.70	0.70	0.65	0.65

EHS Mono HT Quiet

Heating

Silent Function	Outdoor Air Temperature(°C DB)			
	-15	2	7	15
Level 1	0.92	0.90	0.95	0.95
Level 2	0.82	0.80	0.86	0.86
Level 3	0.68	0.67	0.72	0.72
Low-noise	0.54	0.60	0.65	0.65

Cooling

Silent Function	Outdoor Air Temperature(°C DB)			
	10	20	35	45
Level 1	1.00	1.00	0.95	0.95
Level 2	0.98	0.98	0.86	0.86
Level 3	0.78	0.78	0.65	0.65
Low-noise	0.70	0.70	0.65	0.65

2. Outdoor Units

2-10. Silent mode corrections

EHS Mono R32

Heating

Silent Function	Outdoor Air Temperature(°C DB)			
	-15	2	7	15
Level 1	0.92	0.87	0.94	0.94
Level 2	0.82	0.78	0.84	0.84
Level 3	0.68	0.64	0.69	0.69
Low-noise	0.7	0.6	0.69	0.69

Cooling

Silent Function	Outdoor Air Temperature(°C DB)			
	10	20	35	45
Level 1	1	1	0.92	0.92
Level 2	0.98	0.89	0.83	0.83
Level 3	0.81	0.74	0.68	0.68

Correction factor by % glycol

Anti-freeze	Propylene glycol	
%wt	Correction factor	
	Capacity	Power Input
0%	1.000	1.000
10%	0.988	0.994
20%	0.973	0.988
30%	0.955	0.982
40%	0.933	0.976
50%	0.910	0.970

3. Indoor units

3-1. Specifications

ClimateHub, 2 Zone

Model Name		Indoor Unit		AE200DNXMPK/EU	AE200DNXMPK/EU
		Outdoor Unit		AE050CXYDEK/EU	AE080CXYDEK/EU
Mode			-	Heat Pump (A2W)	Heat Pump (A2W)
Power Supply			Φ, #, V, Hz	1, 2, 220-240, 50	1, 2, 220-240, 50
Power input	Cooling (Nominal)		kW	0.3	0.3
	Heating (Nominal)		kW	0.3	0.3
	Cooling (Max)		kW	0.3	0.3
	Heating (Max)		kW	4.3	4.3
Current Input	Cooling (Nominal)		A	1.3	1.3
	Heating (Nominal)		A	1.3	1.3
	Cooling (Max)		A	1.3	1.3
	Heating (Max)		A	18.7	18.7
Field Wiring	MCA		A	18.7	18.7
	MFA		A	23.4	23.4
Heating up time			hh:mm	02:25	01:26
Water Heating	Declared load profile		-	L	L
	Energy efficiency Class		-	A+	A+
Connections	Water Flow Rate (Std)	Heating	LPM	14.4	23.1
		Cooling	LPM	14.4	23.1
	Water Flow Rate	Min	LPM	7	7
		Max	LPM	48	48
	Water Pressure (Max)		bar	3.0	3.0
	Water pipe (To outdoor unit)	Type	-	Straight pipe	Straight pipe
		Inlet	Φ, mm	28	28
		Outlet	Φ, mm	28	28
	Water pipe (Space heating) (Zone 1)	Type	-	Straight pipe	Straight pipe
		Inlet	Φ, mm	28	28
		Outlet	Φ, mm	28	28
	Water pipe (Space heating) (Zone 2)	Type	-	Straight pipe	Straight pipe
		Inlet	Φ, mm	28	28
		Outlet	Φ, mm	28	28
	Water pipe (DHW)	Type	-	Straight pipe	Straight pipe
		Inlet	Φ, mm	22	22
		Outlet	Φ, mm	22	22
	Water pipe (Secondary water	Type	-	Straight pipe	Straight pipe
		Inlet	Φ, mm	22	22
	Leaving Water Temperature	Heating Min.	°C	15	15
		Heating Max.	°C	75	75
		Cooling Min.	°C	5	5
		Cooling Max.	°C	25	25
DHW Tank	Nominal Water Volume		liter	200	200
	Net Water Volume		liter	194	194
	Material		-	SUS 316L	SUS 316L
	Max. water pressure		bar	10	10
	Max. water temperature		°C	70	70
	Insulation		-	Inner EPP+VIP+Outer EPS	Inner EPP+VIP+Outer EPS

3. Indoor units

3-1. Specifications

ClimateHub, 2 Zone

Model Name		Indoor Unit		AE200DNXMPK/EU	AE200DNXMPK/EU
		Outdoor Unit		AE050CXYDEK/EU	AE080CXYDEK/EU
Water Pump	Type		-	BLDC Inv	BLDC Inv
	Motor Input		W	95	95
	Number of Unit		EA	2	2
	Max static pressure		mAq	9.0	9.0
Backup Heater	Power		kW	1Φ 2/4kW	1Φ 2/4kW
	Thermostat (Thermal Fuse)		℃	98 +0 -5	98 +0 -5
Safety device	Pressure relief valve		bar	2.9	2.9
	Flow Sensor		LPM	5~60	5~60
	Temperature & Pressure relief valve		bar, ℃	10bar, 90℃	10bar, 90℃
Expansion vessel	Internal water volume		liter	10	10
	Max. Working pressure		Mpa	0.3	0.3
	Initial Charging pressure		Mpa	0.12	0.12
IP Class			-	IPX1	IPX1
Air Purge Valve			Φ, inch	BSPP male 3/8"	BSPP male 3/8"
Sound Level	Sound Pressure Level	Heating	dB(A)	28	28
		Cooling	dB(A)	28	28
	Sound Power Level	Heating	dB(A)	42	42
Casing	Color		-	**GREIGE**	**GREIGE**
	Material		-	PCM	PCM
Packing	Material		-	EPS/BOX/Pallet	EPS/BOX/Pallet
	Packing Weight		kg	9.6	9.6
External Dimension	Net Weight		kg	139.0	139.0
	Shipping Weight		kg	150.5	150.5
	Net Dimensions	Width	mm	598	598
		Height	mm	1,850	1,850
		Depth	mm	600	600
	Shipping Dimensions	Width	mm	676	676
		Height	mm	2,050	2,050
		Depth	mm	740	740

NOTE

- Specifications may be subject to change without prior notice.
- Select wire size based on the value of MCA

3. Indoor units

3-1. Specifications

ClimateHub, 2 Zone

Model Name		Indoor Unit		AE200DNXMPK/EU	AE200DNXMPK/EU
		Outdoor Unit		AE120CXYDEK/EU	AE160CXYDEK/EU
Mode			-	Heat Pump (A2W)	Heat Pump (A2W)
Power Supply			Φ, #, V, Hz	1, 2, 220-240, 50	1, 2, 220-240, 50
Power input	Cooling (Nominal)		kW	0.3	0.3
	Heating (Nominal)		kW	0.3	0.3
	Cooling (Max)		kW	0.3	0.3
	Heating (Max)		kW	4.3	4.3
Current Input	Cooling (Nominal)		A	1.3	1.3
	Heating (Nominal)		A	1.3	1.3
	Cooling (Max)		A	1.3	1.3
	Heating (Max)		A	18.7	18.7
Field Wiring	MCA		A	18.7	18.7
	MFA		A	23.4	23.4
Heating up time			hh:mm	00:53	00:53
Water Heating	Declared load profile		-	L	L
	Energy efficiency Class		-	A+	A+
Connections	Water Flow Rate (Std)	Heating	LPM	34.6	46.2
		Cooling	LPM	34.6	40.4
	Water Flow Rate	Min	LPM	7	7
		Max	LPM	58	58
	Water Pressure (Max)		bar	3.0	3.0
	Water pipe (To outdoor unit)	Type	-	Straight pipe	Straight pipe
		Inlet	Φ, mm	28	28
		Outlet	Φ, mm	28	28
	Water pipe (Space heating) (Zone 1)	Type	-	Straight pipe	Straight pipe
		Inlet	Φ, mm	28	28
		Outlet	Φ, mm	28	28
	Water pipe (Space heating) (Zone 2)	Type	-	Straight pipe	Straight pipe
		Inlet	Φ, mm	28	28
		Outlet	Φ, mm	28	28
	Water pipe (DHW)	Type	-	Straight pipe	Straight pipe
		Inlet	Φ, mm	22	22
		Outlet	Φ, mm	22	22
	Water pipe (Secondary water	Type	-	Straight pipe	Straight pipe
		Inlet	Φ, mm	22	22
	Leaving Water Temperature	Heating Min.	°C	15	15
		Heating Max.	°C	75	75
		Cooling Min.	°C	5	5
		Cooling Max.	°C	25	25
DHW Tank	Nominal Water Volume		liter	200	200
	Net Water Volume		liter	194	194
	Material		-	SUS 316L	SUS 316L
	Max. water pressure		bar	10	10
	Max. water temperature		°C	70	70
	Insulation		-	Inner EPP+VIP+Outer EPS	Inner EPP+VIP+Outer EPS

3. Indoor units

3-1. Specifications

ClimateHub, 2 Zone

Model Name		Indoor Unit		AE200DNXMPK/EU	AE200DNXMPK/EU
		Outdoor Unit		AE120CXYDEK/EU	AE160CXYDEK/EU
Water Pump	Type		-	BLDC Inv	BLDC Inv
	Motor Input		W	95	95
	Number of Unit		EA	2	2
	Max static pressure		mAq	9.0	9.0
Backup Heater	Power		kW	1Φ 2/4kW	1Φ 2/4kW
	Thermostat (Thermal Fuse)		℃	98 +0 -5	98 +0 -5
Safety device	Pressure relief valve		bar	2.9	2.9
	Flow Sensor		LPM	5~60	5~60
	Temperature & Pressure relief valve		bar, ℃	10bar, 90℃	10bar, 90℃
Expansion vessel	Internal water volume		liter	10	10
	Max. Working pressure		Mpa	0.3	0.3
	Initial Charging pressure		Mpa	0.12	0.12
IP Class			-	IPX1	IPX1
Air Purge Valve			Φ, inch	BSPP male 3/8"	BSPP male 3/8"
Sound Level	Sound Pressure Level	Heating	dB(A)	30	30
		Cooling	dB(A)	30	30
	Sound Power Level	Heating	dB(A)	44	44
Casing	Color		-	GREIGE	GREIGE
	Material		-	PCM	PCM
Packing	Material		-	EPS/BOX/Pallet	EPS/BOX/Pallet
	Packing Weight		kg	9.6	9.6
External Dimension	Net Weight		kg	139.0	139.0
	Shipping Weight		kg	150.5	150.5
	Net Dimensions	Width	mm	598	598
		Height	mm	1,850	1,850
		Depth	mm	600	600
	Shipping Dimensions	Width	mm	676	676
		Height	mm	2,050	2,050
		Depth	mm	740	740

NOTE

- Specifications may be subject to change without prior notice.
- Select wire size based on the value of MCA

3. Indoor units

3-1. Specifications

ClimateHub, 2 Zone

Model Name		Indoor Unit		AE200DNXMPK/EU	AE200DNXMPK/EU
		Outdoor Unit		AE080CXYDGK/EU	AE120CXYDGK/EU
Mode			-	Heat Pump (A2W)	Heat Pump (A2W)
Power Supply			Φ, #, V, Hz	3, 4, 380-415, 50	3, 4, 380-415, 50
Power input	Cooling (Nominal)		kW	3Φ - / 1Φ 0.3	3Φ - / 1Φ 0.3
	Heating (Nominal)		kW	3Φ - / 1Φ 0.3	3Φ - / 1Φ 0.3
	Cooling (Max)		kW	3Φ - / 1Φ 0.3	3Φ - / 1Φ 0.3
	Heating (Max)		kW	3Φ 6.0 / 1Φ 0.3	3Φ 6.0 / 1Φ 0.3
Current Input	Cooling (Nominal)		A	3Φ - / 1Φ 1.3	3Φ - / 1Φ 1.3
	Heating (Nominal)		A	3Φ - / 1Φ 1.3	3Φ - / 1Φ 1.3
	Cooling (Max)		A	3Φ - / 1Φ 1.3	3Φ - / 1Φ 1.3
	Heating (Max)		A	3Φ 8.7 / 1Φ 1.3	3Φ 8.7 / 1Φ 1.3
Field Wiring	MCA		A	3Φ 8.7 / 1Φ 1.3	3Φ 8.7 / 1Φ 1.3
	MFA		A	3Φ 10.9 / 1Φ 1.6	3Φ 10.9 / 1Φ 1.6
Heating up time			hh:mm	01:26	00:53
Water Heating	Declared load profile		-	L	L
	Energy efficiency Class		-	A+	A+
Connections	Water Flow Rate (Std)	Heating	LPM	23.1	34.6
		Cooling	LPM	23.1	34.6
	Water Flow Rate	Min	LPM	7	7
		Max	LPM	48	58
	Water Pressure (Max)		bar	3.0	3.0
	Water pipe (To outdoor unit)	Type	-	Straight pipe	Straight pipe
		Inlet	Φ, mm	28	28
		Outlet	Φ, mm	28	28
	Water pipe (Space heating) (Zone 1)	Type	-	Straight pipe	Straight pipe
		Inlet	Φ, mm	28	28
		Outlet	Φ, mm	28	28
	Water pipe (Space heating) (Zone 2)	Type	-	Straight pipe	Straight pipe
		Inlet	Φ, mm	28	28
		Outlet	Φ, mm	28	28
	Water pipe (DHW)	Type	-	Straight pipe	Straight pipe
		Inlet	Φ, mm	22	22
		Outlet	Φ, mm	22	22
	Water pipe (Secondary water	Type	-	Straight pipe	Straight pipe
		Inlet	Φ, mm	22	22
	Leaving Water Temperature	Heating Min.	°C	15	15
		Heating Max.	°C	75	75
		Cooling Min.	°C	5	5
		Cooling Max.	°C	25	25
DHW Tank	Nominal Water Volume		liter	200	200
	Net Water Volume		liter	194	194
	Material		-	SUS 316L	SUS 316L
	Max. water pressure		bar	10	10
	Max. water temperature		°C	70	70
	Insulation		-	Inner EPP+VIP+Outer EPS	Inner EPP+VIP+Outer EPS

3. Indoor units

3-1. Specifications

ClimateHub, 2 Zone

Model Name		Indoor Unit		AE200DNXMPK/EU	AE200DNXMPK/EU
		Outdoor Unit		AE080CXYDGK/EU	AE120CXYDGK/EU
Water Pump	Type		-	BLDC Inv	BLDC Inv
	Motor Input		W	95	95
	Number of Unit		EA	2	2
	Max static pressure		mAq	9.0	9.0
Backup Heater	Power		kW	3Φ 6kW	3Φ 6kW
	Thermostat (Thermal Fuse)		℃	98 +0 -5	98 +0 -5
Safety device	Pressure relief valve		bar	2.9	2.9
	Flow Sensor		LPM	5~60	5~60
	Temperature & Pressure relief valve		bar, ℃	10bar, 90℃	10bar, 90℃
Expansion vessel	Internal water volume		liter	10	10
	Max. Working pressure		MPa	0.3	0.3
	Initial Charging pressure		MPa	0.12	0.12
IP Class			-	IPX1	IPX1
Air Purge Valve			Φ, inch	BSPP male 3/8"	BSPP male 3/8"
Sound Level	Sound Pressure Level	Heating	dB(A)	28	30
		Cooling	dB(A)	28	30
	Sound Power Level	Heating	dB(A)	42	44
Casing	Color		-	GREIGE	GREIGE
	Material		-	PCM	PCM
Packing	Material		-	EPS/BOX/Pallet	EPS/BOX/Pallet
	Packing Weight		kg	9.6	9.6
External Dimension	Net Weight		kg	139.0	139.0
	Shipping Weight		kg	150.5	150.5
	Net Dimensions	Width	mm	598	598
		Height	mm	1,850	1,850
		Depth	mm	600	600
	Shipping Dimensions	Width	mm	676	676
		Height	mm	2,050	2,050
		Depth	mm	740	740

NOTE

- Specifications may be subject to change without prior notice.
- Select wire size based on the value of MCA

3. Indoor units

3-1. Specifications

ClimateHub, 2 Zone

Model Name		Indoor Unit		AE200DNXMPK/EU	AE200DNXMPK/EU
		Outdoor Unit		AE160CXYDGK/EU	AE080BXYDEG/EU
Mode			-	Heat Pump (A2W)	Heat Pump (A2W)
Power Supply			Φ, #, V, Hz	3, 4, 380-415, 50	1, 2, 220-240, 50
Power input	Cooling (Nominal)		kW	3Φ - / 1Φ 0.3	0.3
	Heating (Nominal)		kW	3Φ - / 1Φ 0.3	0.3
	Cooling (Max)		kW	3Φ - / 1Φ 0.3	0.3
	Heating (Max)		kW	3Φ 6.0 / 1Φ 0.3	4.3
Current Input	Cooling (Nominal)		A	3Φ - / 1Φ 1.3	1.3
	Heating (Nominal)		A	3Φ - / 1Φ 1.3	1.3
	Cooling (Max)		A	3Φ - / 1Φ 1.3	1.3
	Heating (Max)		A	3Φ 8.7 / 1Φ 1.3	18.7
Field Wiring	MCA		A	3Φ 8.7 / 1Φ 1.3	18.7
	MFA		A	3Φ 10.9 / 1Φ 1.6	23.4
Heating up time			hh:mm	00:53	01:32
Water Heating	Declared load profile		-	L	L
	Energy efficiency Class		-	A+	A+
Connections	Water Flow Rate (Std)	Heating	LPM	46.2	23.1
		Cooling	LPM	40.4	23.1
	Water Flow Rate	Min	LPM	7	7
		Max	LPM	58	48
	Water Pressure (Max)		bar	3.0	3.0
	Water pipe (To outdoor unit)	Type	-	Straight pipe	Straight pipe
		Inlet	Φ, mm	28	28
		Outlet	Φ, mm	28	28
	Water pipe (Space heating) (Zone 1)	Type	-	Straight pipe	Straight pipe
		Inlet	Φ, mm	28	28
		Outlet	Φ, mm	28	28
	Water pipe (Space heating) (Zone 2)	Type	-	Straight pipe	Straight pipe
		Inlet	Φ, mm	28	28
		Outlet	Φ, mm	28	28
	Water pipe (DHW)	Type	-	Straight pipe	Straight pipe
		Inlet	Φ, mm	22	22
		Outlet	Φ, mm	22	22
	Water pipe (Secondary water	Type	-	Straight pipe	Straight pipe
		Inlet	Φ, mm	22	22
	Leaving Water Temperature	Heating Min.	°C	15	15
		Heating Max.	°C	75	70
		Cooling Min.	°C	5	5
		Cooling Max.	°C	25	25
DHW Tank	Nominal Water Volume		liter	200	200
	Net Water Volume		liter	194	194
	Material		-	SUS 316L	SUS 316L
	Max. water pressure		bar	10	10
	Max. water temperature		°C	70	70
	Insulation		-	Inner EPP+VIP+Outer EPS	Inner EPP+VIP+Outer EPS

3. Indoor units

3-1. Specifications

ClimateHub, 2 Zone

Model Name		Indoor Unit		AE200DNXMPK/EU	AE200DNXMPK/EU
		Outdoor Unit		AE160CXYDGK/EU	AE080BXYDEG/EU
Water Pump	Type		-	BLDC Inv	BLDC Inv
	Motor Input		W	95	95
	Number of Unit		EA	2	2
	Max static pressure		mAq	9.0	9.0
Backup Heater	Power		kW	3Φ 6kW	1Φ 2/4kW
	Thermostat (Thermal Fuse)		℃	98 +0 -5	98 +0 -5
Safety device	Pressure relief valve		bar	2.9	2.9
	Flow Sensor		LPM	5~60	5~60
	Temperature & Pressure relief valve		bar, ℃	10bar, 90℃	10bar, 90℃
Expansion vessel	Internal water volume		liter	10	10
	Max. Working pressure		MPa	0.3	0.3
	Initial Charging pressure		MPa	0.12	0.12
IP Class			-	IPX1	IPX1
Air Purge Valve			Φ, inch	BSPP male 3/8"	BSPP male 3/8"
Sound Level	Sound Pressure Level	Heating	dB(A)	30	28
		Cooling	dB(A)	30	28
	Sound Power Level	Heating	dB(A)	44	42
Casing	Color		-	GREIGE	GREIGE
	Material		-	PCM	PCM
Packing	Material		-	EPS/BOX/Pallet	EPS/BOX/Pallet
	Packing Weight		kg	9.6	9.6
External Dimension	Net Weight		kg	139.0	139.0
	Shipping Weight		kg	150.5	150.5
	Net Dimensions	Width	mm	598	598
		Height	mm	1,850	1,850
		Depth	mm	600	600
	Shipping Dimensions	Width	mm	676	676
		Height	mm	2,050	2,050
		Depth	mm	740	740

NOTE

- Specifications may be subject to change without prior notice.
- Select wire size based on the value of MCA

3. Indoor units

3-1. Specifications

ClimateHub, 2 Zone

Model Name		Indoor Unit		AE200DNXMPK/EU	AE200DNXMPK/EU
		Outdoor Unit		AE120BXYDEG/EU	AE140BXYDEG/EU
Mode			-	Heat Pump (A2W)	Heat Pump (A2W)
Power Supply			Φ, #, V, Hz	1, 2, 220-240, 50	1, 2, 220-240, 50
Power input	Cooling (Nominal)		kW	0.3	0.3
	Heating (Nominal)		kW	0.3	0.3
	Cooling (Max)		kW	0.3	0.3
	Heating (Max)		kW	4.3	4.3
Current Input	Cooling (Nominal)		A	1.3	1.3
	Heating (Nominal)		A	1.3	1.3
	Cooling (Max)		A	1.3	1.3
	Heating (Max)		A	18.7	18.7
Field Wiring	MCA		A	18.7	18.7
	MFA		A	23.4	23.4
Heating up time			hh:mm	01:03	01:03
Water Heating	Declared load profile		-	L	L
	Energy efficiency Class		-	A+	A+
Connections	Water Flow Rate (Std)	Heating	LPM	34.6	34.6
		Cooling	LPM	34.6	34.6
	Water Flow Rate	Min	LPM	7	7
		Max	LPM	58	58
	Water Pressure (Max)		bar	3.0	3.0
	Water pipe (To outdoor unit)	Type	-	Straight pipe	Straight pipe
		Inlet	Φ, mm	28	28
		Outlet	Φ, mm	28	28
	Water pipe (Space heating) (Zone 1)	Type	-	Straight pipe	Straight pipe
		Inlet	Φ, mm	28	28
		Outlet	Φ, mm	28	28
	Water pipe (Space heating) (Zone 2)	Type	-	Straight pipe	Straight pipe
		Inlet	Φ, mm	28	28
		Outlet	Φ, mm	28	28
	Water pipe (DHW)	Type	-	Straight pipe	Straight pipe
		Inlet	Φ, mm	22	22
		Outlet	Φ, mm	22	22
	Water pipe (Secondary water	Type	-	Straight pipe	Straight pipe
		Inlet	Φ, mm	22	22
	Leaving Water Temperature	Heating Min.	°C	15	15
		Heating Max.	°C	70	70
		Cooling Min.	°C	5	5
		Cooling Max.	°C	25	25
DHW Tank	Nominal Water Volume		liter	200	200
	Net Water Volume		liter	194	194
	Material		-	SUS 316L	SUS 316L
	Max. water pressure		bar	10	10
	Max. water temperature		°C	70	70
	Insulation		-	Inner EPP+VIP+Outer EPS	Inner EPP+VIP+Outer EPS

3. Indoor units

3-1. Specifications

ClimateHub, 2 Zone

Model Name		Indoor Unit		AE200DNXMPK/EU	AE200DNXMPK/EU
		Outdoor Unit		AE120BXYDEG/EU	AE140BXYDEG/EU
Water Pump	Type		-	BLDC Inv	BLDC Inv
	Motor Input		W	95	95
	Number of Unit		EA	2	2
	Max static pressure		mAq	9.0	9.0
Backup Heater	Power		kW	1Φ 2/4kW	1Φ 2/4kW
	Thermostat (Thermal Fuse)		℃	98 +0 -5	98 +0 -5
Safety device	Pressure relief valve		bar	2.9	2.9
	Flow Sensor		LPM	5~60	5~60
	Temperature & Pressure relief valve		bar, ℃	10bar, 90℃	10bar, 90℃
Expansion vessel	Internal water volume		liter	10	10
	Max. Working pressure		MPa	0.3	0.3
	Initial Charging pressure		MPa	0.12	0.12
IP Class			-	IPX1	IPX1
Air Purge Valve			Φ, inch	BSPP male 3/8"	BSPP male 3/8"
Sound Level	Sound Pressure Level	Heating	dB(A)	30	30
		Cooling	dB(A)	30	30
	Sound Power Level	Heating	dB(A)	44	44
Casing	Color		-	GREIGE	GREIGE
	Material		-	PCM	PCM
Packing	Material		-	EPS/BOX/Pallet	EPS/BOX/Pallet
	Packing Weight		kg	9.6	9.6
External Dimension	Net Weight		kg	139.0	139.0
	Shipping Weight		kg	150.5	150.5
	Net Dimensions	Width	mm	598	598
		Height	mm	1,850	1,850
		Depth	mm	600	600
	Shipping Dimensions	Width	mm	676	676
		Height	mm	2,050	2,050
		Depth	mm	740	740

NOTE

- Specifications may be subject to change without prior notice.
- Select wire size based on the value of MCA

3. Indoor units

3-1. Specifications

ClimateHub, 2 Zone

Model Name		Indoor Unit		AE200DNXMPK/EU	AE200DNXMPK/EU
		Outdoor Unit		AE080BXYDGG/EU	AE120BXYDGG/EU
Mode			-	Heat Pump (A2W)	Heat Pump (A2W)
Power Supply			Φ, #, V, Hz	3, 4, 380-415, 50	3, 4, 380-415, 50
Power input	Cooling (Nominal)		kW	3Φ - / 1Φ 0.3	3Φ - / 1Φ 0.3
	Heating (Nominal)		kW	3Φ - / 1Φ 0.3	3Φ - / 1Φ 0.3
	Cooling (Max)		kW	3Φ - / 1Φ 0.3	3Φ - / 1Φ 0.3
	Heating (Max)		kW	3Φ 6.0 / 1Φ 0.3	3Φ 6.0 / 1Φ 0.3
Current Input	Cooling (Nominal)		A	3Φ - / 1Φ 1.3	3Φ - / 1Φ 1.3
	Heating (Nominal)		A	3Φ - / 1Φ 1.3	3Φ - / 1Φ 1.3
	Cooling (Max)		A	3Φ - / 1Φ 1.3	3Φ - / 1Φ 1.3
	Heating (Max)		A	3Φ 8.7 / 1Φ 1.3	3Φ 8.7 / 1Φ 1.3
Field Wiring	MCA		A	3Φ 8.7 / 1Φ 1.3	3Φ 8.7 / 1Φ 1.3
	MFA		A	3Φ 10.9 / 1Φ 1.6	3Φ 10.9 / 1Φ 1.6
Heating up time			hh:mm	01:32	01:03
Water Heating	Declared load profile		-	L	L
	Energy efficiency Class		-	A+	A+
Connections	Water Flow Rate (Std)	Heating	LPM	23.1	34.6
		Cooling	LPM	23.1	34.6
	Water Flow Rate	Min	LPM	7	7
		Max	LPM	48	58
	Water Pressure (Max)		bar	3.0	3.0
	Water pipe (To outdoor unit)	Type	-	Straight pipe	Straight pipe
		Inlet	Φ, mm	28	28
		Outlet	Φ, mm	28	28
	Water pipe (Space heating) (Zone 1)	Type	-	Straight pipe	Straight pipe
		Inlet	Φ, mm	28	28
		Outlet	Φ, mm	28	28
	Water pipe (Space heating) (Zone 2)	Type	-	Straight pipe	Straight pipe
		Inlet	Φ, mm	28	28
		Outlet	Φ, mm	28	28
	Water pipe (DHW)	Type	-	Straight pipe	Straight pipe
		Inlet	Φ, mm	22	22
		Outlet	Φ, mm	22	22
	Water pipe (Secondary water	Type	-	Straight pipe	Straight pipe
		Inlet	Φ, mm	22	22
	Leaving Water Temperature	Heating Min.	°C	15	15
		Heating Max.	°C	70	70
		Cooling Min.	°C	5	5
		Cooling Max.	°C	25	25
DHW Tank	Nominal Water Volume		liter	200	200
	Net Water Volume		liter	194	194
	Material		-	SUS 316L	SUS 316L
	Max. water pressure		bar	10	10
	Max. water temperature		°C	70	70
	Insulation		-	Inner EPP+VIP+Outer EPS	Inner EPP+VIP+Outer EPS

3. Indoor units

3-1. Specifications

ClimateHub, 2 Zone

Model Name		Indoor Unit		AE200DNXMPK/EU	AE200DNXMPK/EU
		Outdoor Unit		AE080BXYDGG/EU	AE120BXYDGG/EU
Water Pump	Type		-	BLDC Inv	BLDC Inv
	Motor Input		W	95	95
	Number of Unit		EA	2	2
	Max static pressure		mAq	9.0	9.0
Backup Heater	Power		kW	3Φ 6kW	3Φ 6kW
	Thermostat (Thermal Fuse)		℃	98 +0 -5	98 +0 -5
Safety device	Pressure relief valve		bar	2.9	2.9
	Flow Sensor		LPM	5~60	5~60
	Temperature & Pressure relief valve		bar, ℃	10bar, 90℃	10bar, 90℃
Expansion vessel	Internal water volume		liter	10	10
	Max. Working pressure		MPa	0.3	0.3
	Initial Charging pressure		MPa	0.12	0.12
IP Class			-	IPX1	IPX1
Air Purge Valve			Φ, inch	BSPP male 3/8"	BSPP male 3/8"
Sound Level	Sound Pressure Level	Heating	dB(A)	28	30
		Cooling	dB(A)	28	30
	Sound Power Level	Heating	dB(A)	42	44
Casing	Color		-	GREIGE	GREIGE
	Material		-	PCM	PCM
Packing	Material		-	EPS/BOX/Pallet	EPS/BOX/Pallet
	Packing Weight		kg	9.6	9.6
External Dimension	Net Weight		kg	139.0	139.0
	Shipping Weight		kg	150.5	150.5
	Net Dimensions	Width	mm	598	598
		Height	mm	1,850	1,850
		Depth	mm	600	600
	Shipping Dimensions	Width	mm	676	676
		Height	mm	2,050	2,050
		Depth	mm	740	740

NOTE

- Specifications may be subject to change without prior notice.
- Select wire size based on the value of MCA

3. Indoor units

3-1. Specifications

ClimateHub, 2 Zone

Model Name		Indoor Unit		AE200DNXMPK/EU	AE200DNXMPK/EU
		Outdoor Unit		AE140BXYDGG/EU	AE050RXYDEG/EU
Mode			-	Heat Pump (A2W)	Heat Pump (A2W)
Power Supply			Φ, #, V, Hz	3, 4, 380-415, 50	1, 2, 220-240, 50
Power input	Cooling (Nominal)		kW	3Φ - / 1Φ 0.3	0.3
	Heating (Nominal)		kW	3Φ - / 1Φ 0.3	0.3
	Cooling (Max)		kW	3Φ - / 1Φ 0.3	0.3
	Heating (Max)		kW	3Φ 6.0 / 1Φ 0.3	4.3
Current Input	Cooling (Nominal)		A	3Φ - / 1Φ 1.3	1.3
	Heating (Nominal)		A	3Φ - / 1Φ 1.3	1.3
	Cooling (Max)		A	3Φ - / 1Φ 1.3	1.3
	Heating (Max)		A	3Φ 8.7 / 1Φ 1.3	18.7
Field Wiring	MCA		A	3Φ 8.7 / 1Φ 1.3	18.7
	MFA		A	3Φ 10.9 / 1Φ 1.6	23.4
Heating up time			hh:mm	01:03	02:12
Water Heating	Declared load profile		-	L	L
	Energy efficiency Class		-	A+	A+
Connections	Water Flow Rate (Std)	Heating	LPM	34.6	14.4
		Cooling	LPM	34.6	14.4
	Water Flow Rate	Min	LPM	7	7
		Max	LPM	58	48
	Water Pressure (Max)		bar	3.0	3.0
	Water pipe (To outdoor unit)	Type	-	Straight pipe	Straight pipe
		Inlet	Φ, mm	28	28
		Outlet	Φ, mm	28	28
	Water pipe (Space heating) (Zone 1)	Type	-	Straight pipe	Straight pipe
		Inlet	Φ, mm	28	28
		Outlet	Φ, mm	28	28
	Water pipe (Space heating) (Zone 2)	Type	-	Straight pipe	Straight pipe
		Inlet	Φ, mm	28	28
		Outlet	Φ, mm	28	28
	Water pipe (DHW)	Type	-	Straight pipe	Straight pipe
		Inlet	Φ, mm	22	22
		Outlet	Φ, mm	22	22
	Water pipe (Secondary water	Type	-	Straight pipe	Straight pipe
		Inlet	Φ, mm	22	22
	Leaving Water Temperature	Heating Min.	°C	15	15
		Heating Max.	°C	70	65
		Cooling Min.	°C	5	5
		Cooling Max.	°C	25	25
DHW Tank	Nominal Water Volume		liter	200	200
	Net Water Volume		liter	194	194
	Material		-	SUS 316L	SUS 316L
	Max. water pressure		bar	10	10
	Max. water temperature		°C	70	70
	Insulation		-	Inner EPP+VIP+Outer EPS	Inner EPP+VIP+Outer EPS

3. Indoor units

3-1. Specifications

ClimateHub, 2 Zone

Model Name		Indoor Unit		AE200DNXMPK/EU	AE200DNXMPK/EU
		Outdoor Unit		AE140BXYDGG/EU	AE050RXYDEG/EU
Water Pump	Type		-	BLDC Inv	BLDC Inv
	Motor Input		W	95	95
	Number of Unit		EA	2	2
	Max static pressure		mAq	9.0	9.0
Backup Heater	Power		kW	3Φ 6kW	1Φ 2/4kW
	Thermostat (Thermal Fuse)		℃	98 +0 -5	98 +0 -5
Safety device	Pressure relief valve		bar	2.9	2.9
	Flow Sensor		LPM	5~60	5~60
	Temperature & Pressure relief valve		bar, ℃	10bar, 90℃	10bar, 90℃
Expansion vessel	Internal water volume		liter	10	10
	Max. Working pressure		MPa	0.3	0.3
	Initial Charging pressure		MPa	0.12	0.12
IP Class			-	IPX1	IPX1
Air Purge Valve			Φ, inch	BSPP male 3/8"	BSPP male 3/8"
Sound Level	Sound Pressure Level	Heating	dB(A)	30	28
		Cooling	dB(A)	30	28
	Sound Power Level	Heating	dB(A)	44	42
Casing	Color		-	GREIGE	GREIGE
	Material		-	PCM	PCM
Packing	Material		-	EPS/BOX/Pallet	EPS/BOX/Pallet
	Packing Weight		kg	9.6	9.6
External Dimension	Net Weight		kg	139.0	139.0
	Shipping Weight		kg	150.5	150.5
	Net Dimensions	Width	mm	598	598
		Height	mm	1,850	1,850
		Depth	mm	600	600
	Shipping Dimensions	Width	mm	676	676
		Height	mm	2,050	2,050
		Depth	mm	740	740

NOTE

- Specifications may be subject to change without prior notice.
- Select wire size based on the value of MCA

3. Indoor units

3-1. Specifications

ClimateHub, 2 Zone

Model Name		Indoor Unit		AE200DNXMPK/EU	AE200DNXMPK/EU
		Outdoor Unit		AE080RXYDEG/EU	AE120RXYDEG/EU
Mode			-	Heat Pump (A2W)	Heat Pump (A2W)
Power Supply			Φ, #, V, Hz	1, 2, 220-240, 50	1, 2, 220-240, 50
Power input	Cooling (Nominal)		kW	0.3	0.3
	Heating (Nominal)		kW	0.3	0.3
	Cooling (Max)		kW	0.3	0.3
	Heating (Max)		kW	4.3	4.3
Current Input	Cooling (Nominal)		A	1.3	1.3
	Heating (Nominal)		A	1.3	1.3
	Cooling (Max)		A	1.3	1.3
	Heating (Max)		A	18.7	18.7
Field Wiring	MCA		A	18.7	18.7
	MFA		A	23.4	23.4
Heating up time			hh:mm	01:22	00:42
Water Heating	Declared load profile		-	L	L
	Energy efficiency Class		-	A+	A+
Connections	Water Flow Rate (Std)	Heating	LPM	23.1	34.6
		Cooling	LPM	21.6	34.6
	Water Flow Rate	Min	LPM	7	12
		Max	LPM	48	58
	Water Pressure (Max)		bar	3.0	3.0
	Water pipe (To outdoor unit)	Type	-	Straight pipe	Straight pipe
		Inlet	Φ, mm	28	28
		Outlet	Φ, mm	28	28
	Water pipe (Space heating) (Zone 1)	Type	-	Straight pipe	Straight pipe
		Inlet	Φ, mm	28	28
		Outlet	Φ, mm	28	28
	Water pipe (Space heating) (Zone 2)	Type	-	Straight pipe	Straight pipe
		Inlet	Φ, mm	28	28
		Outlet	Φ, mm	28	28
	Water pipe (DHW)	Type	-	Straight pipe	Straight pipe
		Inlet	Φ, mm	22	22
		Outlet	Φ, mm	22	22
	Water pipe (Secondary water	Type	-	Straight pipe	Straight pipe
		Inlet	Φ, mm	22	22
	Leaving Water Temperature	Heating Min.	°C	15	15
		Heating Max.	°C	65	65
		Cooling Min.	°C	5	5
		Cooling Max.	°C	25	25
DHW Tank	Nominal Water Volume		liter	200	200
	Net Water Volume		liter	194	194
	Material		-	SUS 316L	SUS 316L
	Max. water pressure		bar	10	10
	Max. water temperature		°C	70	70
	Insulation		-	Inner EPP+VIP+Outer EPS	Inner EPP+VIP+Outer EPS

3. Indoor units

3-1. Specifications

ClimateHub, 2 Zone

Model Name		Indoor Unit		AE200DNXMPK/EU	AE200DNXMPK/EU
		Outdoor Unit		AE080RXYDEG/EU	AE120RXYDEG/EU
Water Pump	Type		-	BLDC Inv	BLDC Inv
	Motor Input		W	95	95
	Number of Unit		EA	2	2
	Max static pressure		mAq	9.0	9.0
Backup Heater	Power		kW	1Φ 2/4kW	1Φ 2/4kW
	Thermostat (Thermal Fuse)		℃	98 +0 -5	98 +0 -5
Safety device	Pressure relief valve		bar	2.9	2.9
	Flow Sensor		LPM	5~60	5~60
	Temperature & Pressure relief valve		bar, ℃	10bar, 90℃	10bar, 90℃
Expansion vessel	Internal water volume		liter	10	10
	Max. Working pressure		MPa	0.3	0.3
	Initial Charging pressure		MPa	0.12	0.12
IP Class			-	IPX1	IPX1
Air Purge Valve			Φ, inch	BSPP male 3/8"	BSPP male 3/8"
Sound Level	Sound Pressure Level	Heating	dB(A)	28	30
		Cooling	dB(A)	28	30
	Sound Power Level	Heating	dB(A)	42	44
Casing	Color		-	GREIGE	GREIGE
	Material		-	PCM	PCM
Packing	Material		-	EPS/BOX/Pallet	EPS/BOX/Pallet
	Packing Weight		kg	9.6	9.6
External Dimension	Net Weight		kg	139.0	139.0
	Shipping Weight		kg	150.5	150.5
	Net Dimensions	Width	mm	598	598
		Height	mm	1,850	1,850
		Depth	mm	600	600
	Shipping Dimensions	Width	mm	676	676
		Height	mm	2,050	2,050
		Depth	mm	740	740

NOTE

- Specifications may be subject to change without prior notice.
- Select wire size based on the value of MCA

3. Indoor units

3-1. Specifications

ClimateHub, 2 Zone

Model Name		Indoor Unit		AE200DNXMPK/EU	AE200DNXMPK/EU
		Outdoor Unit		AE160RXYDEG/EU	AE080RXYDGG/EU
Mode			-	Heat Pump (A2W)	Heat Pump (A2W)
Power Supply			Φ, #, V, Hz	1, 2, 220-240, 50	3, 4, 380-415, 50
Power input	Cooling (Nominal)		kW	0.3	3Φ - / 1Φ 0.3
	Heating (Nominal)		kW	0.3	3Φ - / 1Φ 0.3
	Cooling (Max)		kW	0.3	3Φ - / 1Φ 0.3
	Heating (Max)		kW	4.3	3Φ 6.0 / 1Φ 0.3
Current Input	Cooling (Nominal)		A	1.3	3Φ - / 1Φ 1.3
	Heating (Nominal)		A	1.3	3Φ - / 1Φ 1.3
	Cooling (Max)		A	1.3	3Φ - / 1Φ 1.3
	Heating (Max)		A	18.7	3Φ 8.7 / 1Φ 1.3
Field Wiring	MCA		A	18.7	3Φ 8.7 / 1Φ 1.3
	MFA		A	23.4	3Φ 10.9 / 1Φ 1.6
Heating up time			hh:mm	00:42	01:22
Water Heating	Declared load profile		-	L	L
	Energy efficiency Class		-	A+	A+
Connections	Water Flow Rate (Std)	Heating	LPM	46.2	23.1
		Cooling	LPM	40.4	21.6
	Water Flow Rate	Min	LPM	12	7
		Max	LPM	58	48
	Water Pressure (Max)		bar	3.0	3.0
	Water pipe (To outdoor unit)	Type	-	Straight pipe	Straight pipe
		Inlet	Φ, mm	28	28
		Outlet	Φ, mm	28	28
	Water pipe (Space heating) (Zone 1)	Type	-	Straight pipe	Straight pipe
		Inlet	Φ, mm	28	28
		Outlet	Φ, mm	28	28
	Water pipe (Space heating) (Zone 2)	Type	-	Straight pipe	Straight pipe
		Inlet	Φ, mm	28	28
		Outlet	Φ, mm	28	28
	Water pipe (DHW)	Type	-	Straight pipe	Straight pipe
		Inlet	Φ, mm	22	22
		Outlet	Φ, mm	22	22
	Water pipe (Secondary water	Type	-	Straight pipe	Straight pipe
		Inlet	Φ, mm	22	22
	Leaving Water Temperature	Heating Min.	°C	15	15
		Heating Max.	°C	65	65
		Cooling Min.	°C	5	5
		Cooling Max.	°C	25	25
DHW Tank	Nominal Water Volume		liter	200	200
	Net Water Volume		liter	194	194
	Material		-	SUS 316L	SUS 316L
	Max. water pressure		bar	10	10
	Max. water temperature		°C	70	70
	Insulation		-	Inner EPP+VIP+Outer EPS	Inner EPP+VIP+Outer EPS

3. Indoor units

3-1. Specifications

ClimateHub, 2 Zone

Model Name		Indoor Unit		AE200DNXMPK/EU	AE200DNXMPK/EU
		Outdoor Unit		AE160RXYDEG/EU	AE080RXYDGG/EU
Water Pump	Type		-	BLDC Inv	BLDC Inv
	Motor Input		W	95	95
	Number of Unit		EA	2	2
	Max static pressure		mAq	9.0	9.0
Backup Heater	Power		kW	1Φ 2/4kW	3Φ 6kW
	Thermostat (Thermal Fuse)		℃	98 +0 -5	98 +0 -5
Safety device	Pressure relief valve		bar	2.9	2.9
	Flow Sensor		LPM	5~60	5~60
	Temperature & Pressure relief valve		bar, ℃	10bar, 90℃	10bar, 90℃
Expansion vessel	Internal water volume		liter	10	10
	Max. Working pressure		MPa	0.3	0.3
	Initial Charging pressure		MPa	0.12	0.12
IP Class			-	IPX1	IPX1
Air Purge Valve			Φ, inch	BSPP male 3/8"	BSPP male 3/8"
Sound Level	Sound Pressure Level	Heating	dB(A)	30	28
		Cooling	dB(A)	30	28
	Sound Power Level	Heating	dB(A)	44	42
Casing	Color		-	GREIGE	GREIGE
	Material		-	PCM	PCM
Packing	Material		-	EPS/BOX/Pallet	EPS/BOX/Pallet
	Packing Weight		kg	9.6	9.6
External Dimension	Net Weight		kg	139.0	139.0
	Shipping Weight		kg	150.5	150.5
	Net Dimensions	Width	mm	598	598
		Height	mm	1,850	1,850
		Depth	mm	600	600
	Shipping Dimensions	Width	mm	676	676
		Height	mm	2,050	2,050
		Depth	mm	740	740

NOTE

- Specifications may be subject to change without prior notice.
- Select wire size based on the value of MCA

3. Indoor units

3-1. Specifications

ClimateHub, 2 Zone

Model Name		Indoor Unit		AE200DNXMPK/EU	AE200DNXMPK/EU
		Outdoor Unit		AE120RXYDGG/EU	AE160RXYDGG/EU
Mode			-	Heat Pump (A2W)	Heat Pump (A2W)
Power Supply			Φ, #, V, Hz	3, 4, 380-415, 50	3, 4, 380-415, 50
Power input	Cooling (Nominal)		kW	3Φ - / 1Φ 0.3	3Φ - / 1Φ 0.3
	Heating (Nominal)		kW	3Φ - / 1Φ 0.3	3Φ - / 1Φ 0.3
	Cooling (Max)		kW	3Φ - / 1Φ 0.3	3Φ - / 1Φ 0.3
	Heating (Max)		kW	3Φ 6.0 / 1Φ 0.3	3Φ 6.0 / 1Φ 0.3
Current Input	Cooling (Nominal)		A	3Φ - / 1Φ 1.3	3Φ - / 1Φ 1.3
	Heating (Nominal)		A	3Φ - / 1Φ 1.3	3Φ - / 1Φ 1.3
	Cooling (Max)		A	3Φ - / 1Φ 1.3	3Φ - / 1Φ 1.3
	Heating (Max)		A	3Φ 8.7 / 1Φ 1.3	3Φ 8.7 / 1Φ 1.3
Field Wiring	MCA		A	3Φ 8.7 / 1Φ 1.3	3Φ 8.7 / 1Φ 1.3
	MFA		A	3Φ 10.9 / 1Φ 1.6	3Φ 10.9 / 1Φ 1.6
Heating up time			hh:mm	00:42	00:42
Water Heating	Declared load profile		-	L	L
	Energy efficiency Class		-	A+	A+
Connections	Water Flow Rate (Std)	Heating	LPM	34.6	46.2
		Cooling	LPM	34.6	40.4
	Water Flow Rate	Min	LPM	12	12
		Max	LPM	58	58
	Water Pressure (Max)		bar	3.0	3.0
	Water pipe (To outdoor unit)	Type	-	Straight pipe	Straight pipe
		Inlet	Φ, mm	28	28
		Outlet	Φ, mm	28	28
	Water pipe (Space heating) (Zone 1)	Type	-	Straight pipe	Straight pipe
		Inlet	Φ, mm	28	28
		Outlet	Φ, mm	28	28
	Water pipe (Space heating) (Zone 2)	Type	-	Straight pipe	Straight pipe
		Inlet	Φ, mm	28	28
		Outlet	Φ, mm	28	28
	Water pipe (DHW)	Type	-	Straight pipe	Straight pipe
		Inlet	Φ, mm	22	22
		Outlet	Φ, mm	22	22
	Water pipe (Secondary water	Type	-	Straight pipe	Straight pipe
		Inlet	Φ, mm	22	22
	Leaving Water Temperature	Heating Min.	°C	15	15
		Heating Max.	°C	65	65
		Cooling Min.	°C	5	5
		Cooling Max.	°C	25	25
DHW Tank	Nominal Water Volume		liter	200	200
	Net Water Volume		liter	194	194
	Material		-	SUS 316L	SUS 316L
	Max. water pressure		bar	10	10
	Max. water temperature		°C	70	70
	Insulation		-	Inner EPP+VIP+Outer EPS	Inner EPP+VIP+Outer EPS

3. Indoor units

3-1. Specifications

ClimateHub, 2 Zone

Model Name		Indoor Unit		AE200DNXMPK/EU	AE200DNXMPK/EU
		Outdoor Unit		AE120RXYDGG/EU	AE160RXYDGG/EU
Water Pump	Type		-	BLDC Inv	BLDC Inv
	Motor Input		W	95	95
	Number of Unit		EA	2	2
	Max static pressure		mAq	9.0	9.0
Backup Heater	Power		kW	3Φ 6kW	3Φ 6kW
	Thermostat (Thermal Fuse)		℃	98 +0 -5	98 +0 -5
Safety device	Pressure relief valve		bar	2.9	2.9
	Flow Sensor		LPM	5~60	5~60
	Temperature & Pressure relief valve		bar, ℃	10bar, 90℃	10bar, 90℃
Expansion vessel	Internal water volume		liter	10	10
	Max. Working pressure		MPa	0.3	0.3
	Initial Charging pressure		MPa	0.12	0.12
IP Class			-	IPX1	IPX1
Air Purge Valve			Φ, inch	BSPP male 3/8"	BSPP male 3/8"
Sound Level	Sound Pressure Level	Heating	dB(A)	30	30
		Cooling	dB(A)	30	30
	Sound Power Level	Heating	dB(A)	44	44
Casing	Color		-	GREIGE	GREIGE
	Material		-	PCM	PCM
Packing	Material		-	EPS/BOX/Pallet	EPS/BOX/Pallet
	Packing Weight		kg	9.6	9.6
External Dimension	Net Weight		kg	139.0	139.0
	Shipping Weight		kg	150.5	150.5
	Net Dimensions	Width	mm	598	598
		Height	mm	1,850	1,850
		Depth	mm	600	600
	Shipping Dimensions	Width	mm	676	676
		Height	mm	2,050	2,050
		Depth	mm	740	740

NOTE

- Specifications may be subject to change without prior notice.
- Select wire size based on the value of MCA

3. Indoor units

3-1. Specifications

ClimateHub

Model Name		Indoor Unit		AE200DNWMPK/EU	AE200DNWMPK/EU
		Outdoor Unit		AE050CXYDEK/EU	AE080CXYDEK/EU
Mode			-	Heat Pump (A2W)	Heat Pump (A2W)
Power Supply			Φ, #, V, Hz	1, 2, 220-240, 50	1, 2, 220-240, 50
Power input	Cooling (Nominal)		kW	0.2	0.2
	Heating (Nominal)		kW	0.2	0.2
	Cooling (Max)		kW	0.2	0.2
	Heating (Max)		kW	4.2	4.2
Current Input	Cooling (Nominal)		A	0.9	0.9
	Heating (Nominal)		A	0.9	0.9
	Cooling (Max)		A	0.9	0.9
	Heating (Max)		A	18.3	18.3
Field Wiring	MCA		A	18.3	18.3
	MFA		A	22.9	22.9
Heating up time			hh:mm	02:25	01:26
Water Heating	Declared load profile		-	L	L
	Energy efficiency Class		-	A+	A+
Connections	Water Flow Rate (Std)	Heating	LPM	14.4	23.1
		Cooling	LPM	14.4	23.1
	Water Flow Rate	Min	LPM	7	7
		Max	LPM	48	48
	Water Pressure (Max)		bar	3.0	3.0
	Water pipe (To outdoor unit)	Type	-	Straight pipe	Straight pipe
		Inlet	Φ, mm	28	28
		Outlet	Φ, mm	28	28
	Water pipe (Space heating) (Zone 1)	Type	-	Straight pipe	Straight pipe
		Inlet	Φ, mm	28	28
		Outlet	Φ, mm	28	28
	Water pipe (DHW)	Type	-	Straight pipe	Straight pipe
		Inlet	Φ, mm	22	22
		Outlet	Φ, mm	22	22
	Water pipe (Secondary water	Type	-	Straight pipe	Straight pipe
		Inlet	Φ, mm	22	22
	Leaving Water Temperature	Heating Min.	°C	15	15
		Heating Max.	°C	75	75
		Cooling Min.	°C	5	5
		Cooling Max.	°C	25	25
DHW Tank	Nominal Water Volume		liter	200	200
	Net Water Volume		liter	194	194
	Material		-	SUS 316L	SUS 316L
	Max. water pressure		bar	10	10
	Max. water temperature		°C	70	70
	Insulation		-	Inner EPP+VIP+Outer EPS	Inner EPP+VIP+Outer EPS
Water Pump	Type		-	BLDC Inv	BLDC Inv
	Motor Input		W	95	95
	Number of Unit		EA	1	1
	Max static pressure		mAq	9.0	9.0
Backup Heater	Power		kW	1Φ 2/4kW	1Φ 2/4kW
	Thermostat (Thermal Fuse)		°C	98 +0 -5	98 +0 -5

3. Indoor units

3-1. Specifications

ClimateHub

Model Name		Indoor Unit		AE200DNWMPK/EU	AE200DNWMPK/EU
		Outdoor Unit		AE050CXYDEK/EU	AE080CXYDEK/EU
Safety device	Pressure relief valve		bar	2.9	2.9
	Flow Sensor		LPM	5~60	5~60
	Temperature & Pressure relief valve		bar, ℃	10bar, 90℃	10bar, 90℃
Expansion vessel	Internal water volume		liter	10	10
	Max. Working pressure		MPa	0.3	0.3
	Initial Charging pressure		MPa	0.12	0.12
IP Class			-	IPX1	IPX1
Air Purge Valve			Φ, inch	BSPP male 3/8"	BSPP male 3/8"
Sound Level	Sound Pressure Level	Heating	dB(A)	26	26
		Cooling	dB(A)	26	26
	Sound Power Level	Heating	dB(A)	40	40
Casing	Color		-	GREIGE	GREIGE
	Material		-	PCM	PCM
Packing	Material		-	EPS/BOX/Pallet	EPS/BOX/Pallet
	Packing Weight		kg	9.6	9.6
External Dimension	Net Weight		kg	132.0	132.0
	Shipping Weight		kg	144.0	144.0
	Net Dimensions	Width	mm	598	598
		Height	mm	1,850	1,850
		Depth	mm	600	600
	Shipping Dimensions	Width	mm	676	676
		Height	mm	2,050	2,050
		Depth	mm	740	740

NOTE

- Specifications may be subject to change without prior notice.
- Select wire size based on the value of MCA

3. Indoor units

3-1. Specifications

ClimateHub

Model Name		Indoor Unit		AE200DNWMPK/EU	AE200DNWMPK/EU
		Outdoor Unit		AE120CXYDEK/EU	AE160CXYDEK/EU
Mode			-	Heat Pump (A2W)	Heat Pump (A2W)
Power Supply			Φ, #, V, Hz	1, 2, 220-240, 50	1, 2, 220-240, 50
Power input	Cooling (Nominal)		kW	0.2	0.2
	Heating (Nominal)		kW	0.2	0.2
	Cooling (Max)		kW	0.2	0.2
	Heating (Max)		kW	4.2	4.2
Current Input	Cooling (Nominal)		A	0.9	0.9
	Heating (Nominal)		A	0.9	0.9
	Cooling (Max)		A	0.9	0.9
	Heating (Max)		A	18.3	18.3
Field Wiring	MCA		A	18.3	18.3
	MFA		A	22.9	22.9
Heating up time			hh:mm	00:53	00:53
Water Heating	Declared load profile		-	L	L
	Energy efficiency Class		-	A+	A+
Connections	Water Flow Rate (Std)	Heating	LPM	34.6	46.2
		Cooling	LPM	34.6	40.4
	Water Flow Rate	Min	LPM	7	7
		Max	LPM	58	58
	Water Pressure (Max)		bar	3.0	3.0
	Water pipe (To outdoor unit)	Type	-	Straight pipe	Straight pipe
		Inlet	Φ, mm	28	28
		Outlet	Φ, mm	28	28
	Water pipe (Space heating) (Zone 1)	Type	-	Straight pipe	Straight pipe
		Inlet	Φ, mm	28	28
		Outlet	Φ, mm	28	28
	Water pipe (DHW)	Type	-	Straight pipe	Straight pipe
		Inlet	Φ, mm	22	22
		Outlet	Φ, mm	22	22
	Water pipe (Secondary water	Type	-	Straight pipe	Straight pipe
		Inlet	Φ, mm	22	22
	Leaving Water Temperature	Heating Min.	°C	15	15
		Heating Max.	°C	75	75
		Cooling Min.	°C	5	5
		Cooling Max.	°C	25	25
DHW Tank	Nominal Water Volume		liter	200	200
	Net Water Volume		liter	194	194
	Material		-	SUS 316L	SUS 316L
	Max. water pressure		bar	10	10
	Max. water temperature		°C	70	70
	Insulation		-	Inner EPP+VIP+Outer EPS	Inner EPP+VIP+Outer EPS
Water Pump	Type		-	BLDC Inv	BLDC Inv
	Motor Input		W	95	95
	Number of Unit		EA	1	1
	Max static pressure		mAq	9.0	9.0
Backup Heater	Power		kW	1Φ 2/4kW	1Φ 2/4kW
	Thermostat (Thermal Fuse)		°C	98 +0 -5	98 +0 -5

3. Indoor units

3-1. Specifications

ClimateHub

Model Name		Indoor Unit		AE200DNWMPK/EU	AE200DNWMPK/EU
		Outdoor Unit		AE120CXYDEK/EU	AE160CXYDEK/EU
Safety device	Pressure relief valve		bar	2.9	2.9
	Flow Sensor		LPM	5~60	5~60
	Temperature & Pressure relief valve		bar, ℃	10bar, 90℃	10bar, 90℃
Expansion vessel	Internal water volume		liter	10	10
	Max. Working pressure		MPa	0.3	0.3
	Initial Charging pressure		MPa	0.12	0.12
IP Class			-	IPX1	IPX1
Air Purge Valve			Φ, inch	BSPP male 3/8"	BSPP male 3/8"
Sound Level	Sound Pressure Level	Heating	dB(A)	28	28
		Cooling	dB(A)	28	28
	Sound Power Level	Heating	dB(A)	42	42
Casing	Color		-	GREIGE	GREIGE
	Material		-	PCM	PCM
Packing	Material		-	EPS/BOX/Pallet	EPS/BOX/Pallet
	Packing Weight		kg	9.6	9.6
External Dimension	Net Weight		kg	132.0	132.0
	Shipping Weight		kg	144.0	144.0
	Net Dimensions	Width	mm	598	598
		Height	mm	1,850	1,850
		Depth	mm	600	600
	Shipping Dimensions	Width	mm	676	676
		Height	mm	2,050	2,050
		Depth	mm	740	740

NOTE

- Specifications may be subject to change without prior notice.
- Select wire size based on the value of MCA

3. Indoor units

3-1. Specifications

ClimateHub

Model Name		Indoor Unit		AE200DNWMPK/EU	AE200DNWMPK/EU
		Outdoor Unit		AE080CXYDGK/EU	AE120CXYDGK/EU
Mode			-	Heat Pump (A2W)	Heat Pump (A2W)
Power Supply			Φ, #, V, Hz	3, 4, 380-415, 50	3, 4, 380-415, 50
Power input	Cooling (Nominal)		kW	3Φ - / 1Φ 0.2	3Φ - / 1Φ 0.2
	Heating (Nominal)		kW	3Φ - / 1Φ 0.2	3Φ - / 1Φ 0.2
	Cooling (Max)		kW	3Φ - / 1Φ 0.2	3Φ - / 1Φ 0.2
	Heating (Max)		kW	3Φ 6.0 / 1Φ 0.2	3Φ 6.0 / 1Φ 0.2
Current Input	Cooling (Nominal)		A	3Φ - / 1Φ 0.9	3Φ - / 1Φ 0.9
	Heating (Nominal)		A	3Φ - / 1Φ 0.9	3Φ - / 1Φ 0.9
	Cooling (Max)		A	3Φ - / 1Φ 0.9	3Φ - / 1Φ 0.9
	Heating (Max)		A	3Φ 8.7 / 1Φ 0.9	3Φ 8.7 / 1Φ 0.9
Field Wiring	MCA		A	3Φ 8.7 / 1Φ 0.9	3Φ 8.7 / 1Φ 0.9
	MFA		A	3Φ 10.9 / 1Φ 1.2	3Φ 10.9 / 1Φ 1.2
Heating up time			hh:mm	01:26	00:53
Water Heating	Declared load profile		-	L	L
	Energy efficiency Class		-	A+	A+
Connections	Water Flow Rate (Std)	Heating	LPM	23.1	34.6
		Cooling	LPM	23.1	34.6
	Water Flow Rate	Min	LPM	7	7
		Max	LPM	48	58
	Water Pressure (Max)		bar	3.0	3.0
	Water pipe (To outdoor unit)	Type	-	Straight pipe	Straight pipe
		Inlet	Φ, mm	28	28
		Outlet	Φ, mm	28	28
	Water pipe (Space heating) (Zone 1)	Type	-	Straight pipe	Straight pipe
		Inlet	Φ, mm	28	28
		Outlet	Φ, mm	28	28
	Water pipe (DHW)	Type	-	Straight pipe	Straight pipe
		Inlet	Φ, mm	22	22
		Outlet	Φ, mm	22	22
	Water pipe (Secondary water	Type	-	Straight pipe	Straight pipe
		Inlet	Φ, mm	22	22
	Leaving Water Temperature	Heating Min.	°C	15	15
		Heating Max.	°C	75	75
		Cooling Min.	°C	5	5
		Cooling Max.	°C	25	25
DHW Tank	Nominal Water Volume		liter	200	200
	Net Water Volume		liter	194	194
	Material		-	SUS 316L	SUS 316L
	Max. water pressure		bar	10	10
	Max. water temperature		°C	70	70
	Insulation		-	Inner EPP+VIP+Outer EPS	Inner EPP+VIP+Outer EPS
Water Pump	Type		-	BLDC Inv	BLDC Inv
	Motor Input		W	95	95
	Number of Unit		EA	1	1
	Max static pressure		mAq	9.0	9.0
Backup Heater	Power		kW	3Φ 6kW	3Φ 6kW
	Thermostat (Thermal Fuse)		°C	98 +0 -5	98 +0 -5

3. Indoor units

3-1. Specifications

ClimateHub

Model Name		Indoor Unit		AE200DNWMPK/EU	AE200DNWMPK/EU
		Outdoor Unit		AE080CXYDGK/EU	AE120CXYDGK/EU
Safety device	Pressure relief valve		bar	2.9	2.9
	Flow Sensor		LPM	5~60	5~60
	Temperature & Pressure relief valve		bar, ℃	10bar, 90℃	10bar, 90℃
Expansion vessel	Internal water volume		liter	10	10
	Max. Working pressure		MPa	0.3	0.3
	Initial Charging pressure		MPa	0.12	0.12
IP Class			-	IPX1	IPX1
Air Purge Valve			Φ, inch	BSPP male 3/8"	BSPP male 3/8"
Sound Level	Sound Pressure Level	Heating	dB(A)	26	28
		Cooling	dB(A)	26	28
	Sound Power Level	Heating	dB(A)	40	42
Casing	Color		-	GREIGE	GREIGE
	Material		-	PCM	PCM
Packing	Material		-	EPS/BOX/Pallet	EPS/BOX/Pallet
	Packing Weight		kg	9.6	9.6
External Dimension	Net Weight		kg	132.0	132.0
	Shipping Weight		kg	144.0	144.0
	Net Dimensions	Width	mm	598	598
		Height	mm	1,850	1,850
		Depth	mm	600	600
	Shipping Dimensions	Width	mm	676	676
		Height	mm	2,050	2,050
		Depth	mm	740	740

NOTE

- Specifications may be subject to change without prior notice.
- Select wire size based on the value of MCA

3. Indoor units

3-1. Specifications

ClimateHub

Model Name		Indoor Unit		AE200DNWMPK/EU	AE200DNWMPK/EU
		Outdoor Unit		AE160CXYDGK/EU	AE080BXYDEG/EU
Mode			-	Heat Pump (A2W)	Heat Pump (A2W)
Power Supply			Φ, #, V, Hz	3, 4, 380-415, 50	1, 2, 220-240, 50
Power input	Cooling (Nominal)		kW	3Φ - / 1Φ 0.2	0.2
	Heating (Nominal)		kW	3Φ - / 1Φ 0.2	0.2
	Cooling (Max)		kW	3Φ - / 1Φ 0.2	0.2
	Heating (Max)		kW	3Φ 6.0 / 1Φ 0.2	4.2
Current Input	Cooling (Nominal)		A	3Φ - / 1Φ 0.9	0.9
	Heating (Nominal)		A	3Φ - / 1Φ 0.9	0.9
	Cooling (Max)		A	3Φ - / 1Φ 0.9	0.9
	Heating (Max)		A	3Φ 8.7 / 1Φ 0.9	18.3
Field Wiring	MCA		A	3Φ 8.7 / 1Φ 0.9	18.3
	MFA		A	3Φ 10.9 / 1Φ 1.2	22.9
Heating up time			hh:mm	00:53	01:32
Water Heating	Declared load profile		-	L	L
	Energy efficiency Class		-	A+	A+
Connections	Water Flow Rate (Std)	Heating	LPM	46.2	23.1
		Cooling	LPM	40.4	23.1
	Water Flow Rate	Min	LPM	7	7
		Max	LPM	58	48
	Water Pressure (Max)		bar	3.0	3.0
	Water pipe (To outdoor unit)	Type	-	Straight pipe	Straight pipe
		Inlet	Φ, mm	28	28
		Outlet	Φ, mm	28	28
	Water pipe (Space heating) (Zone 1)	Type	-	Straight pipe	Straight pipe
		Inlet	Φ, mm	28	28
		Outlet	Φ, mm	28	28
	Water pipe (DHW)	Type	-	Straight pipe	Straight pipe
		Inlet	Φ, mm	22	22
		Outlet	Φ, mm	22	22
	Water pipe (Secondary water	Type	-	Straight pipe	Straight pipe
		Inlet	Φ, mm	22	22
	Leaving Water Temperature	Heating Min.	°C	15	15
		Heating Max.	°C	75	70
		Cooling Min.	°C	5	5
		Cooling Max.	°C	25	25
DHW Tank	Nominal Water Volume		liter	200	200
	Net Water Volume		liter	194	194
	Material		-	SUS 316L	SUS 316L
	Max. water pressure		bar	10	10
	Max. water temperature		°C	70	70
	Insulation		-	Inner EPP+VIP+Outer EPS	Inner EPP+VIP+Outer EPS
Water Pump	Type		-	BLDC Inv	BLDC Inv
	Motor Input		W	95	95
	Number of Unit		EA	1	1
	Max static pressure		mAq	9.0	9.0
Backup Heater	Power		kW	3Φ 6kW	1Φ 2/4kW
	Thermostat (Thermal Fuse)		°C	98 +0 -5	98 +0 -5

3. Indoor units

3-1. Specifications

ClimateHub

Model Name		Indoor Unit		AE200DNWMPK/EU	AE200DNWMPK/EU
		Outdoor Unit		AE160CXYDGK/EU	AE080BXYDEG/EU
Safety device	Pressure relief valve		bar	2.9	2.9
	Flow Sensor		LPM	5~60	5~60
	Temperature & Pressure relief valve		bar, ℃	10bar, 90℃	10bar, 90℃
Expansion vessel	Internal water volume		liter	10	10
	Max. Working pressure		MPa	0.3	0.3
	Initial Charging pressure		MPa	0.12	0.12
IP Class			-	IPX1	IPX1
Air Purge Valve			Φ, inch	BSPP male 3/8"	BSPP male 3/8"
Sound Level	Sound Pressure Level	Heating	dB(A)	28	26
		Cooling	dB(A)	28	26
	Sound Power Level	Heating	dB(A)	42	40
Casing	Color		-	GREIGE	GREIGE
	Material		-	PCM	PCM
Packing	Material		-	EPS/BOX/Pallet	EPS/BOX/Pallet
	Packing Weight		kg	9.6	9.6
External Dimension	Net Weight		kg	132.0	132.0
	Shipping Weight		kg	144.0	144.0
	Net Dimensions	Width	mm	598	598
		Height	mm	1,850	1,850
		Depth	mm	600	600
	Shipping Dimensions	Width	mm	676	676
		Height	mm	2,050	2,050
		Depth	mm	740	740

NOTE

- Specifications may be subject to change without prior notice.
- Select wire size based on the value of MCA

3. Indoor units

3-1. Specifications

ClimateHub

Model Name		Indoor Unit		AE200DNWMPK/EU	AE200DNWMPK/EU
		Outdoor Unit		AE120BXYDEG/EU	AE140BXYDEG/EU
Mode			-	Heat Pump (A2W)	Heat Pump (A2W)
Power Supply			Φ, #, V, Hz	1, 2, 220-240, 50	1, 2, 220-240, 50
Power input	Cooling (Nominal)		kW	0.2	0.2
	Heating (Nominal)		kW	0.2	0.2
	Cooling (Max)		kW	0.2	0.2
	Heating (Max)		kW	4.2	4.2
Current Input	Cooling (Nominal)		A	0.9	0.9
	Heating (Nominal)		A	0.9	0.9
	Cooling (Max)		A	0.9	0.9
	Heating (Max)		A	18.3	18.3
Field Wiring	MCA		A	18.3	18.3
	MFA		A	22.9	22.9
Heating up time			hh:mm	01:03	01:03
Water Heating	Declared load profile		-	L	L
	Energy efficiency Class		-	A+	A+
Connections	Water Flow Rate (Std)	Heating	LPM	34.6	34.6
		Cooling	LPM	34.6	34.6
	Water Flow Rate	Min	LPM	7	7
		Max	LPM	58	58
	Water Pressure (Max)		bar	3.0	3.0
	Water pipe (To outdoor unit)	Type	-	Straight pipe	Straight pipe
		Inlet	Φ, mm	28	28
		Outlet	Φ, mm	28	28
	Water pipe (Space heating) (Zone 1)	Type	-	Straight pipe	Straight pipe
		Inlet	Φ, mm	28	28
		Outlet	Φ, mm	28	28
	Water pipe (DHW)	Type	-	Straight pipe	Straight pipe
		Inlet	Φ, mm	22	22
		Outlet	Φ, mm	22	22
	Water pipe (Secondary water	Type	-	Straight pipe	Straight pipe
		Inlet	Φ, mm	22	22
	Leaving Water Temperature	Heating Min.	°C	15	15
		Heating Max.	°C	70	70
		Cooling Min.	°C	5	5
		Cooling Max.	°C	25	25
DHW Tank	Nominal Water Volume		liter	200	200
	Net Water Volume		liter	194	194
	Material		-	SUS 316L	SUS 316L
	Max. water pressure		bar	10	10
	Max. water temperature		°C	70	70
	Insulation		-	Inner EPP+VIP+Outer EPS	Inner EPP+VIP+Outer EPS
Water Pump	Type		-	BLDC Inv	BLDC Inv
	Motor Input		W	95	95
	Number of Unit		EA	1	1
	Max static pressure		mAq	9.0	9.0
Backup Heater	Power		kW	1Φ 2/4kW	1Φ 2/4kW
	Thermostat (Thermal Fuse)		°C	98 +0 -5	98 +0 -5

3. Indoor units

3-1. Specifications

ClimateHub

Model Name		Indoor Unit		AE200DNWMPK/EU	AE200DNWMPK/EU
		Outdoor Unit		AE120BXYDEG/EU	AE140BXYDEG/EU
Safety device	Pressure relief valve		bar	2.9	2.9
	Flow Sensor		LPM	5~60	5~60
	Temperature & Pressure relief valve		bar, ℃	10bar, 90℃	10bar, 90℃
Expansion vessel	Internal water volume		liter	10	10
	Max. Working pressure		MPa	0.3	0.3
	Initial Charging pressure		MPa	0.12	0.12
IP Class			-	IPX1	IPX1
Air Purge Valve			Φ, inch	BSPP male 3/8"	BSPP male 3/8"
Sound Level	Sound Pressure Level	Heating	dB(A)	28	28
		Cooling	dB(A)	28	28
	Sound Power Level	Heating	dB(A)	42	42
Casing	Color		-	GREIGE	GREIGE
	Material		-	PCM	PCM
Packing	Material		-	EPS/BOX/Pallet	EPS/BOX/Pallet
	Packing Weight		kg	9.6	9.6
External Dimension	Net Weight		kg	132.0	132.0
	Shipping Weight		kg	144.0	144.0
	Net Dimensions	Width	mm	598	598
		Height	mm	1,850	1,850
		Depth	mm	600	600
	Shipping Dimensions	Width	mm	676	676
		Height	mm	2,050	2,050
		Depth	mm	740	740

NOTE

- Specifications may be subject to change without prior notice.
- Select wire size based on the value of MCA

3. Indoor units

3-1. Specifications

ClimateHub

Model Name		Indoor Unit		AE200DNWMPK/EU	AE200DNWMPK/EU
		Outdoor Unit		AE080BXYDGG/EU	AE120BXYDGG/EU
Mode			-	Heat Pump (A2W)	Heat Pump (A2W)
Power Supply			Φ, #, V, Hz	3, 4, 380-415, 50	3, 4, 380-415, 50
Power input	Cooling (Nominal)		kW	3Φ - / 1Φ 0.2	3Φ - / 1Φ 0.2
	Heating (Nominal)		kW	3Φ - / 1Φ 0.2	3Φ - / 1Φ 0.2
	Cooling (Max)		kW	3Φ - / 1Φ 0.2	3Φ - / 1Φ 0.2
	Heating (Max)		kW	3Φ 6.0 / 1Φ 0.2	3Φ 6.0 / 1Φ 0.2
Current Input	Cooling (Nominal)		A	3Φ - / 1Φ 0.9	3Φ - / 1Φ 0.9
	Heating (Nominal)		A	3Φ - / 1Φ 0.9	3Φ - / 1Φ 0.9
	Cooling (Max)		A	3Φ - / 1Φ 0.9	3Φ - / 1Φ 0.9
	Heating (Max)		A	3Φ 8.7 / 1Φ 0.9	3Φ 8.7 / 1Φ 0.9
Field Wiring	MCA		A	3Φ 8.7 / 1Φ 0.9	3Φ 8.7 / 1Φ 0.9
	MFA		A	3Φ 10.9 / 1Φ 1.2	3Φ 10.9 / 1Φ 1.2
Heating up time			hh:mm	01:32	01:03
Water Heating	Declared load profile		-	L	L
	Energy efficiency Class		-	A+	A+
Connections	Water Flow Rate (Std)	Heating	LPM	23.1	34.6
		Cooling	LPM	23.1	34.6
	Water Flow Rate	Min	LPM	7	7
		Max	LPM	48	58
	Water Pressure (Max)		bar	3.0	3.0
	Water pipe (To outdoor unit)	Type	-	Straight pipe	Straight pipe
		Inlet	Φ, mm	28	28
		Outlet	Φ, mm	28	28
	Water pipe (Space heating) (Zone 1)	Type	-	Straight pipe	Straight pipe
		Inlet	Φ, mm	28	28
		Outlet	Φ, mm	28	28
	Water pipe (DHW)	Type	-	Straight pipe	Straight pipe
		Inlet	Φ, mm	22	22
		Outlet	Φ, mm	22	22
	Water pipe (Secondary water	Type	-	Straight pipe	Straight pipe
		Inlet	Φ, mm	22	22
	Leaving Water Temperature	Heating Min.	°C	15	15
		Heating Max.	°C	70	70
		Cooling Min.	°C	5	5
		Cooling Max.	°C	25	25
DHW Tank	Nominal Water Volume		liter	200	200
	Net Water Volume		liter	194	194
	Material		-	SUS 316L	SUS 316L
	Max. water pressure		bar	10	10
	Max. water temperature		°C	70	70
	Insulation		-	Inner EPP+VIP+Outer EPS	Inner EPP+VIP+Outer EPS
Water Pump	Type		-	BLDC Inv	BLDC Inv
	Motor Input		W	95	95
	Number of Unit		EA	1	1
	Max static pressure		mAq	9.0	9.0
Backup Heater	Power		kW	3Φ 6kW	3Φ 6kW
	Thermostat (Thermal Fuse)		°C	98 +0 -5	98 +0 -5

3. Indoor units

3-1. Specifications

ClimateHub

Model Name		Indoor Unit		AE200DNWMPK/EU	AE200DNWMPK/EU
		Outdoor Unit		AE080BXYDGG/EU	AE120BXYDGG/EU
Safety device	Pressure relief valve		bar	2.9	2.9
	Flow Sensor		LPM	5~60	5~60
	Temperature & Pressure relief valve		bar, ℃	10bar, 90℃	10bar, 90℃
Expansion vessel	Internal water volume		liter	10	10
	Max. Working pressure		MPa	0.3	0.3
	Initial Charging pressure		MPa	0.12	0.12
IP Class			-	IPX1	IPX1
Air Purge Valve			Φ, inch	BSPP male 3/8"	BSPP male 3/8"
Sound Level	Sound Pressure Level	Heating	dB(A)	26	28
		Cooling	dB(A)	26	28
	Sound Power Level	Heating	dB(A)	40	42
Casing	Color		-	GREIGE	GREIGE
	Material		-	PCM	PCM
Packing	Material		-	EPS/BOX/Pallet	EPS/BOX/Pallet
	Packing Weight		kg	9.6	9.6
External Dimension	Net Weight		kg	132.0	132.0
	Shipping Weight		kg	144.0	144.0
	Net Dimensions	Width	mm	598	598
		Height	mm	1,850	1,850
		Depth	mm	600	600
	Shipping Dimensions	Width	mm	676	676
		Height	mm	2,050	2,050
		Depth	mm	740	740

NOTE

- Specifications may be subject to change without prior notice.
- Select wire size based on the value of MCA

3. Indoor units

3-1. Specifications

ClimateHub

Model Name		Indoor Unit		AE200DNWMPK/EU	AE200DNWMPK/EU
		Outdoor Unit		AE140BXYDGG/EU	AE050RXYDEG/EU
Mode			-	Heat Pump (A2W)	Heat Pump (A2W)
Power Supply			Φ, #, V, Hz	3, 4, 380-415, 50	1, 2, 220-240, 50
Power input	Cooling (Nominal)		kW	3Φ - / 1Φ 0.2	0.2
	Heating (Nominal)		kW	3Φ - / 1Φ 0.2	0.2
	Cooling (Max)		kW	3Φ - / 1Φ 0.2	0.2
	Heating (Max)		kW	3Φ 6.0 / 1Φ 0.2	4.2
Current Input	Cooling (Nominal)		A	3Φ - / 1Φ 0.9	0.9
	Heating (Nominal)		A	3Φ - / 1Φ 0.9	0.9
	Cooling (Max)		A	3Φ - / 1Φ 0.9	0.9
	Heating (Max)		A	3Φ 8.7 / 1Φ 0.9	18.3
Field Wiring	MCA		A	3Φ 8.7 / 1Φ 0.9	18.3
	MFA		A	3Φ 10.9 / 1Φ 1.2	22.9
Heating up time			hh:mm	01:03	02:12
Water Heating	Declared load profile		-	L	L
	Energy efficiency Class		-	A+	A+
Connections	Water Flow Rate (Std)	Heating	LPM	34.6	14.4
		Cooling	LPM	34.6	14.4
	Water Flow Rate	Min	LPM	7	7
		Max	LPM	58	48
	Water Pressure (Max)		bar	3.0	3.0
	Water pipe (To outdoor unit)	Type	-	Straight pipe	Straight pipe
		Inlet	Φ, mm	28	28
		Outlet	Φ, mm	28	28
	Water pipe (Space heating) (Zone 1)	Type	-	Straight pipe	Straight pipe
		Inlet	Φ, mm	28	28
		Outlet	Φ, mm	28	28
	Water pipe (DHW)	Type	-	Straight pipe	Straight pipe
		Inlet	Φ, mm	22	22
		Outlet	Φ, mm	22	22
	Water pipe (Secondary water	Type	-	Straight pipe	Straight pipe
		Inlet	Φ, mm	22	22
	Leaving Water Temperature	Heating Min.	°C	15	15
		Heating Max.	°C	70	65
		Cooling Min.	°C	5	5
		Cooling Max.	°C	25	25
DHW Tank	Nominal Water Volume		liter	200	200
	Net Water Volume		liter	194	194
	Material		-	SUS 316L	SUS 316L
	Max. water pressure		bar	10	10
	Max. water temperature		°C	70	70
	Insulation		-	Inner EPP+VIP+Outer EPS	Inner EPP+VIP+Outer EPS
Water Pump	Type		-	BLDC Inv	BLDC Inv
	Motor Input		W	95	95
	Number of Unit		EA	1	1
	Max static pressure		mAq	9.0	9.0
Backup Heater	Power		kW	3Φ 6kW	1Φ 2/4kW
	Thermostat (Thermal Fuse)		°C	98 +0 -5	98 +0 -5

3. Indoor units

3-1. Specifications

ClimateHub

Model Name		Indoor Unit		AE200DNWMPK/EU	AE200DNWMPK/EU
		Outdoor Unit		AE140BXYDGG/EU	AE050RXYDEG/EU
Safety device	Pressure relief valve		bar	2.9	2.9
	Flow Sensor		LPM	5~60	5~60
	Temperature & Pressure relief valve		bar, ℃	10bar, 90℃	10bar, 90℃
Expansion vessel	Internal water volume		liter	10	10
	Max. Working pressure		MPa	0.3	0.3
	Initial Charging pressure		MPa	0.12	0.12
IP Class			-	IPX1	IPX1
Air Purge Valve			Φ, inch	BSPP male 3/8"	BSPP male 3/8"
Sound Level	Sound Pressure Level	Heating	dB(A)	28	26
		Cooling	dB(A)	28	26
	Sound Power Level	Heating	dB(A)	42	40
Casing	Color		-	GREIGE	GREIGE
	Material		-	PCM	PCM
Packing	Material		-	EPS/BOX/Pallet	EPS/BOX/Pallet
	Packing Weight		kg	9.6	9.6
External Dimension	Net Weight		kg	132.0	132.0
	Shipping Weight		kg	144.0	144.0
	Net Dimensions	Width	mm	598	598
		Height	mm	1,850	1,850
		Depth	mm	600	600
	Shipping Dimensions	Width	mm	676	676
		Height	mm	2,050	2,050
		Depth	mm	740	740

NOTE

- Specifications may be subject to change without prior notice.
- Select wire size based on the value of MCA

3. Indoor units

3-1. Specifications

ClimateHub

Model Name		Indoor Unit		AE200DNWMPK/EU	AE200DNWMPK/EU
		Outdoor Unit		AE080RXYDEG/EU	AE120RXYDEG/EU
Mode			-	Heat Pump (A2W)	Heat Pump (A2W)
Power Supply			Φ, #, V, Hz	1, 2, 220-240, 50	1, 2, 220-240, 50
Power input	Cooling (Nominal)		kW	0.2	0.2
	Heating (Nominal)		kW	0.2	0.2
	Cooling (Max)		kW	0.2	0.2
	Heating (Max)		kW	4.2	4.2
Current Input	Cooling (Nominal)		A	0.9	0.9
	Heating (Nominal)		A	0.9	0.9
	Cooling (Max)		A	0.9	0.9
	Heating (Max)		A	18.3	18.3
Field Wiring	MCA		A	18.3	18.3
	MFA		A	22.9	22.9
Heating up time			hh:mm	01:22	00:42
Water Heating	Declared load profile		-	L	L
	Energy efficiency Class		-	A+	A+
Connections	Water Flow Rate (Std)	Heating	LPM	23.1	34.6
		Cooling	LPM	21.6	34.6
	Water Flow Rate	Min	LPM	7	12
		Max	LPM	48	58
	Water Pressure (Max)		bar	3.0	3.0
	Water pipe (To outdoor unit)	Type	-	Straight pipe	Straight pipe
		Inlet	Φ, mm	28	28
		Outlet	Φ, mm	28	28
	Water pipe (Space heating) (Zone 1)	Type	-	Straight pipe	Straight pipe
		Inlet	Φ, mm	28	28
		Outlet	Φ, mm	28	28
	Water pipe (DHW)	Type	-	Straight pipe	Straight pipe
		Inlet	Φ, mm	22	22
		Outlet	Φ, mm	22	22
	Water pipe (Secondary water	Type	-	Straight pipe	Straight pipe
		Inlet	Φ, mm	22	22
	Leaving Water Temperature	Heating Min.	°C	15	15
		Heating Max.	°C	65	65
		Cooling Min.	°C	5	5
		Cooling Max.	°C	25	25
DHW Tank	Nominal Water Volume		liter	200	200
	Net Water Volume		liter	194	194
	Material		-	SUS 316L	SUS 316L
	Max. water pressure		bar	10	10
	Max. water temperature		°C	70	70
	Insulation		-	Inner EPP+VIP+Outer EPS	Inner EPP+VIP+Outer EPS
Water Pump	Type		-	BLDC Inv	BLDC Inv
	Motor Input		W	95	95
	Number of Unit		EA	1	1
	Max static pressure		mAq	9.0	9.0
Backup Heater	Power		kW	1Φ 2/4kW	1Φ 2/4kW
	Thermostat (Thermal Fuse)		°C	98 +0 -5	98 +0 -5

3. Indoor units

3-1. Specifications

ClimateHub

Model Name		Indoor Unit		AE200DNWMPK/EU	AE200DNWMPK/EU
		Outdoor Unit		AE080RXYDEG/EU	AE120RXYDEG/EU
Safety device	Pressure relief valve		bar	2.9	2.9
	Flow Sensor		LPM	5~60	5~60
	Temperature & Pressure relief valve		bar, ℃	10bar, 90℃	10bar, 90℃
Expansion vessel	Internal water volume		liter	10	10
	Max. Working pressure		MPa	0.3	0.3
	Initial Charging pressure		MPa	0.12	0.12
IP Class			-	IPX1	IPX1
Air Purge Valve			Φ, inch	BSPP male 3/8"	BSPP male 3/8"
Sound Level	Sound Pressure Level	Heating	dB(A)	26	28
		Cooling	dB(A)	26	28
	Sound Power Level	Heating	dB(A)	40	42
Casing	Color		-	GREIGE	GREIGE
	Material		-	PCM	PCM
Packing	Material		-	EPS/BOX/Pallet	EPS/BOX/Pallet
	Packing Weight		kg	9.6	9.6
External Dimension	Net Weight		kg	132.0	132.0
	Shipping Weight		kg	144.0	144.0
	Net Dimensions	Width	mm	598	598
		Height	mm	1,850	1,850
		Depth	mm	600	600
	Shipping Dimensions	Width	mm	676	676
		Height	mm	2,050	2,050
		Depth	mm	740	740

NOTE

- Specifications may be subject to change without prior notice.
- Select wire size based on the value of MCA

3. Indoor units

3-1. Specifications

ClimateHub

Model Name		Indoor Unit		AE200DNWMPK/EU	AE200DNWMPK/EU
		Outdoor Unit		AE160RXYDEG/EU	AE080RXYDGG/EU
Mode			-	Heat Pump (A2W)	Heat Pump (A2W)
Power Supply			Φ, #, V, Hz	1, 2, 220-240, 50	3, 4, 380-415, 50
Power input	Cooling (Nominal)		kW	0.2	3Φ - / 1Φ 0.2
	Heating (Nominal)		kW	0.2	3Φ - / 1Φ 0.2
	Cooling (Max)		kW	0.2	3Φ - / 1Φ 0.2
	Heating (Max)		kW	4.2	3Φ 6.0 / 1Φ 0.2
Current Input	Cooling (Nominal)		A	0.9	3Φ - / 1Φ 0.9
	Heating (Nominal)		A	0.9	3Φ - / 1Φ 0.9
	Cooling (Max)		A	0.9	3Φ - / 1Φ 0.9
	Heating (Max)		A	18.3	3Φ 8.7 / 1Φ 0.9
Field Wiring	MCA		A	18.3	3Φ 8.7 / 1Φ 0.9
	MFA		A	22.9	3Φ 10.9 / 1Φ 1.2
Heating up time			hh:mm	00:42	01:22
Water Heating	Declared load profile		-	L	L
	Energy efficiency Class		-	A+	A+
Connections	Water Flow Rate (Std)	Heating	LPM	46.2	23.1
		Cooling	LPM	40.4	21.6
	Water Flow Rate	Min	LPM	12	7
		Max	LPM	58	48
	Water Pressure (Max)		bar	3.0	3.0
	Water pipe (To outdoor unit)	Type	-	Straight pipe	Straight pipe
		Inlet	Φ, mm	28	28
		Outlet	Φ, mm	28	28
	Water pipe (Space heating) (Zone 1)	Type	-	Straight pipe	Straight pipe
		Inlet	Φ, mm	28	28
		Outlet	Φ, mm	28	28
	Water pipe (DHW)	Type	-	Straight pipe	Straight pipe
		Inlet	Φ, mm	22	22
		Outlet	Φ, mm	22	22
	Water pipe (Secondary water	Type	-	Straight pipe	Straight pipe
		Inlet	Φ, mm	22	22
	Leaving Water Temperature	Heating Min.	°C	15	15
		Heating Max.	°C	65	65
		Cooling Min.	°C	5	5
		Cooling Max.	°C	25	25
DHW Tank	Nominal Water Volume		liter	200	200
	Net Water Volume		liter	194	194
	Material		-	SUS 316L	SUS 316L
	Max. water pressure		bar	10	10
	Max. water temperature		°C	70	70
	Insulation		-	Inner EPP+VIP+Outer EPS	Inner EPP+VIP+Outer EPS
Water Pump	Type		-	BLDC Inv	BLDC Inv
	Motor Input		W	95	95
	Number of Unit		EA	1	1
	Max static pressure		mAq	9.0	9.0
Backup Heater	Power		kW	1Φ 2/4kW	3Φ 6kW
	Thermostat (Thermal Fuse)		°C	98 +0 -5	98 +0 -5

3. Indoor units

3-1. Specifications

ClimateHub

Model Name		Indoor Unit		AE200DNWMPK/EU	AE200DNWMPK/EU
		Outdoor Unit		AE160RXYDEG/EU	AE080RXYDGG/EU
Safety device	Pressure relief valve		bar	2.9	2.9
	Flow Sensor		LPM	5~60	5~60
	Temperature & Pressure relief valve		bar, ℃	10bar, 90℃	10bar, 90℃
Expansion vessel	Internal water volume		liter	10	10
	Max. Working pressure		MPa	0.3	0.3
	Initial Charging pressure		MPa	0.12	0.12
IP Class			-	IPX1	IPX1
Air Purge Valve			Φ, inch	BSPP male 3/8"	BSPP male 3/8"
Sound Level	Sound Pressure Level	Heating	dB(A)	28	26
		Cooling	dB(A)	28	26
	Sound Power Level	Heating	dB(A)	42	40
Casing	Color		-	GREIGE	GREIGE
	Material		-	PCM	PCM
Packing	Material		-	EPS/BOX/Pallet	EPS/BOX/Pallet
	Packing Weight		kg	9.6	9.6
External Dimension	Net Weight		kg	132.0	132.0
	Shipping Weight		kg	144.0	144.0
	Net Dimensions	Width	mm	598	598
		Height	mm	1,850	1,850
		Depth	mm	600	600
	Shipping Dimensions	Width	mm	676	676
		Height	mm	2,050	2,050
		Depth	mm	740	740

NOTE

- Specifications may be subject to change without prior notice.
- Select wire size based on the value of MCA

3. Indoor units

3-1. Specifications

ClimateHub

Model Name		Indoor Unit		AE200DNWMPK/EU	AE200DNWMPK/EU
		Outdoor Unit		AE120RXYDGG/EU	AE160RXYDGG/EU
Mode			-	Heat Pump (A2W)	Heat Pump (A2W)
Power Supply			Φ, #, V, Hz	3, 4, 380-415, 50	3, 4, 380-415, 50
Power input	Cooling (Nominal)		kW	3Φ - / 1Φ 0.2	3Φ - / 1Φ 0.2
	Heating (Nominal)		kW	3Φ - / 1Φ 0.2	3Φ - / 1Φ 0.2
	Cooling (Max)		kW	3Φ - / 1Φ 0.2	3Φ - / 1Φ 0.2
	Heating (Max)		kW	3Φ 6.0 / 1Φ 0.2	3Φ 6.0 / 1Φ 0.2
Current Input	Cooling (Nominal)		A	3Φ - / 1Φ 0.9	3Φ - / 1Φ 0.9
	Heating (Nominal)		A	3Φ - / 1Φ 0.9	3Φ - / 1Φ 0.9
	Cooling (Max)		A	3Φ - / 1Φ 0.9	3Φ - / 1Φ 0.9
	Heating (Max)		A	3Φ 8.7 / 1Φ 0.9	3Φ 8.7 / 1Φ 0.9
Field Wiring	MCA		A	3Φ 8.7 / 1Φ 0.9	3Φ 8.7 / 1Φ 0.9
	MFA		A	3Φ 10.9 / 1Φ 1.2	3Φ 10.9 / 1Φ 1.2
Heating up time			hh:mm	00:42	00:42
Water Heating	Declared load profile		-	L	L
	Energy efficiency Class		-	A+	A+
Connections	Water Flow Rate (Std)	Heating	LPM	34.6	46.2
		Cooling	LPM	34.6	40.4
	Water Flow Rate	Min	LPM	12	12
		Max	LPM	58	58
	Water Pressure (Max)		bar	3.0	3.0
	Water pipe (To outdoor unit)	Type	-	Straight pipe	Straight pipe
		Inlet	Φ, mm	28	28
		Outlet	Φ, mm	28	28
	Water pipe (Space heating) (Zone 1)	Type	-	Straight pipe	Straight pipe
		Inlet	Φ, mm	28	28
		Outlet	Φ, mm	28	28
	Water pipe (DHW)	Type	-	Straight pipe	Straight pipe
		Inlet	Φ, mm	22	22
		Outlet	Φ, mm	22	22
	Water pipe (Secondary water	Type	-	Straight pipe	Straight pipe
		Inlet	Φ, mm	22	22
	Leaving Water Temperature	Heating Min.	°C	15	15
		Heating Max.	°C	65	65
		Cooling Min.	°C	5	5
		Cooling Max.	°C	25	25
DHW Tank	Nominal Water Volume		liter	200	200
	Net Water Volume		liter	194	194
	Material		-	SUS 316L	SUS 316L
	Max. water pressure		bar	10	10
	Max. water temperature		°C	70	70
	Insulation		-	Inner EPP+VIP+Outer EPS	Inner EPP+VIP+Outer EPS
Water Pump	Type		-	BLDC Inv	BLDC Inv
	Motor Input		W	95	95
	Number of Unit		EA	1	1
	Max static pressure		mAq	9.0	9.0
Backup Heater	Power		kW	3Φ 6kW	3Φ 6kW
	Thermostat (Thermal Fuse)		°C	98 +0 -5	98 +0 -5

3. Indoor units

3-1. Specifications

ClimateHub

Model Name		Indoor Unit		AE200DNWMPK/EU	AE200DNWMPK/EU
		Outdoor Unit		AE120RXYDGG/EU	AE160RXYDGG/EU
Safety device	Pressure relief valve		bar	2.9	2.9
	Flow Sensor		LPM	5~60	5~60
	Temperature & Pressure relief valve		bar, ℃	10bar, 90℃	10bar, 90℃
Expansion vessel	Internal water volume		liter	10	10
	Max. Working pressure		MPa	0.3	0.3
	Initial Charging pressure		MPa	0.12	0.12
IP Class			-	IPX1	IPX1
Air Purge Valve			Φ, inch	BSPP male 3/8"	BSPP male 3/8"
Sound Level	Sound Pressure Level	Heating	dB(A)	28	28
		Cooling	dB(A)	28	28
	Sound Power Level	Heating	dB(A)	42	42
Casing	Color		-	GREIGE	GREIGE
	Material		-	PCM	PCM
Packing	Material		-	EPS/BOX/Pallet	EPS/BOX/Pallet
	Packing Weight		kg	9.6	9.6
External Dimension	Net Weight		kg	132.0	132.0
	Shipping Weight		kg	144.0	144.0
	Net Dimensions	Width	mm	598	598
		Height	mm	1,850	1,850
		Depth	mm	600	600
	Shipping Dimensions	Width	mm	676	676
		Height	mm	2,050	2,050
		Depth	mm	740	740

NOTE

- Specifications may be subject to change without prior notice.
- Select wire size based on the value of MCA

3. Indoor units

3-1. Specifications

Hydro Unit, 2 zone

Model Name		Indoor Unit		AE160DNZMPK/EU	AE160DNZMPK/EU
		Outdoor Unit		AE050CXYDEK/EU	AE080CXYDEK/EU
Mode			-	Heat Pump (A2W)	Heat Pump (A2W)
Power Supply			Φ, #, V, Hz	1, 2, 220-240, 50	1, 2, 220-240, 50
Power input	Cooling (Nominal)		kW	0.3	0.3
	Heating (Nominal)		kW	0.3	0.3
	Cooling (Max)		kW	0.3	0.3
	Heating (Max)		kW	4.3	4.3
Current Input	Cooling (Nominal)		A	1.3	1.3
	Heating (Nominal)		A	1.3	1.3
	Cooling (Max)		A	1.3	1.3
	Heating (Max)		A	18.7	18.7
Field Wiring	MCA		A	18.7	18.7
	MFA		A	23.4	23.4
Connections	Water Flow Rate (Std)	Heating	LPM	14.4	23.1
		Cooling	LPM	14.4	23.1
	Water Flow Rate	Min	LPM	7	7
		Max	LPM	48	48
	Water Pressure (Max)		bar	3.0	3.0
	Water pipe (To outdoor unit)	Type	-	BSPP Female 1 1/4	BSPP Female 1 1/4
		Inlet	Φ, mm	28	28
		Outlet	Φ, mm	28	28
	Water pipe (Space heating) (Zone 1)	Type	-	BSPP Female 1 1/4	BSPP Female 1 1/4
		Inlet	Φ, mm	28	28
		Outlet	Φ, mm	28	28
	Water pipe (Space heating) (Zone 2)	Type	-	BSPP Female 1 1/4	BSPP Female 1 1/4
		Inlet	Φ, mm	28	28
		Outlet	Φ, mm	28	28
	Water pipe (Tank)	Type	-	BSPP Female 1 1/4	BSPP Female 1 1/4
		Inlet	Φ, mm	28	28
		Outlet	Φ, mm	28	28
	Leaving Water Temperature	Heating Min.	°C	15	15
		Heating Max.	°C	75	75
		Cooling Min.	°C	5	5
		Cooling Max.	°C	25	25
Water Pump	Type		-	BLDC Inv	BLDC Inv
	Motor Input		W	95	95
	Number of Unit		EA	2	2
	Max static pressure		mAq	9	9
Backup Heater	Power		kW	1Φ 2/4kW	1Φ 2/4kW
	Thermostat (Thermal Fuse)		°C	98 +0 -5	98 +0 -5
Safety device	Pressure relief valve		bar	2.9	2.9
	Flow Sensor		LPM	5~60	5~60
Expansion vessel	Internal water volume		liter	10	10
	Max. Working pressure		MPa	0.3	0.3
	Initial Charging pressure		MPa	0.12	0.12
Air Purge Valve			Φ, inch	BSPP male 3/8"	BSPP male 3/8"
Service Valve			Φ, inch	BSPP male 1 1/4	BSPP male 1 1/4

3. Indoor units

3-1. Specifications

Hydro Unit, 2 zone

Model Name		Indoor Unit		AE160DNZMPK/EU	AE160DNZMPK/EU
		Outdoor Unit		AE050CXYDEK/EU	AE080CXYDEK/EU
Sound Level	Sound Pressure Level	Heating	dB(A)	28	28
		Cooling	dB(A)	28	28
	Sound Power Level	Heating	dB(A)	42	42
Casing	Color		-	GREIGE	GREIGE
	Material		-	PCM	PCM
Packing	Material		-	EPS/BOX	EPS/BOX
	Packing Weight		kg	3.7	3.7
External Dimension	Net Weight		kg	54.0	54.0
	Shipping Weight		kg	61.0	61.0
	Net Dimensions	Width	mm	530	530
		Height	mm	840	840
		Depth	mm	350	350
	Shipping Dimensions	Width	mm	602	602
		Height	mm	1,032	1,032
		Depth	mm	435	435

NOTE

- Specifications may be subject to change without prior notice.
- Select wire size based on the value of MCA

3. Indoor units

3-1. Specifications

Hydro Unit, 2 zone

Model Name		Indoor Unit		AE160DNZMPK/EU	AE160DNZMPK/EU
		Outdoor Unit		AE120CXYDEK/EU	AE160CXYDEK/EU
Mode			-	Heat Pump (A2W)	Heat Pump (A2W)
Power Supply			Φ, #, V, Hz	1, 2, 220-240, 50	1, 2, 220-240, 50
Power input	Cooling (Nominal)		kW	0.3	0.3
	Heating (Nominal)		kW	0.3	0.3
	Cooling (Max)		kW	0.3	0.3
	Heating (Max)		kW	4.3	4.3
Current Input	Cooling (Nominal)		A	1.3	1.3
	Heating (Nominal)		A	1.3	1.3
	Cooling (Max)		A	1.3	1.3
	Heating (Max)		A	18.7	18.7
Field Wiring	MCA		A	18.7	18.7
	MFA		A	23.4	23.4
Connections	Water Flow Rate (Std)	Heating	LPM	34.6	46.2
		Cooling	LPM	34.6	40.4
	Water Flow Rate	Min	LPM	7	7
		Max	LPM	58	58
	Water Pressure (Max)		bar	3.0	3.0
	Water pipe (To outdoor unit)	Type	-	BSPP Female 1 1/4	BSPP Female 1 1/4
		Inlet	Φ, mm	28	28
		Outlet	Φ, mm	28	28
	Water pipe (Space heating) (Zone 1)	Type	-	BSPP Female 1 1/4	BSPP Female 1 1/4
		Inlet	Φ, mm	28	28
		Outlet	Φ, mm	28	28
	Water pipe (Space heating) (Zone 2)	Type	-	BSPP Female 1 1/4	BSPP Female 1 1/4
		Inlet	Φ, mm	28	28
		Outlet	Φ, mm	28	28
	Water pipe (Tank)	Type	-	BSPP Female 1 1/4	BSPP Female 1 1/4
		Inlet	Φ, mm	28	28
		Outlet	Φ, mm	28	28
	Leaving Water Temperature	Heating Min.	°C	15	15
		Heating Max.	°C	75	75
		Cooling Min.	°C	5	5
		Cooling Max.	°C	25	25
Water Pump	Type		-	BLDC Inv	BLDC Inv
	Motor Input		W	95	95
	Number of Unit		EA	2	2
	Max static pressure		mAq	9	9
Backup Heater	Power		kW	1Φ 2/4kW	1Φ 2/4kW
	Thermostat (Thermal Fuse)		°C	98 +0 -5	98 +0 -5
Safety device	Pressure relief valve		bar	2.9	2.9
	Flow Sensor		LPM	5~60	5~60
Expansion vessel	Internal water volume		liter	10	10
	Max. Working pressure		MPa	0.3	0.3
	Initial Charging pressure		MPa	0.12	0.12
Air Purge Valve			Φ, inch	BSPP male 3/8"	BSPP male 3/8"
Service Valve			Φ, inch	BSPP male 1 1/4	BSPP male 1 1/4

3. Indoor units

3-1. Specifications

Hydro Unit, 2 zone

Model Name		Indoor Unit		AE160DNZMPK/EU	AE160DNZMPK/EU
		Outdoor Unit		AE120CXYDEK/EU	AE160CXYDEK/EU
Sound Level	Sound Pressure Level	Heating	dB(A)	30	30
		Cooling	dB(A)	30	30
	Sound Power Level	Heating	dB(A)	44	44
Casing	Color		-	GREIGE	GREIGE
	Material		-	PCM	PCM
Packing	Material		-	EPS/BOX	EPS/BOX
	Packing Weight		kg	3.7	3.7
External Dimension	Net Weight		kg	54.0	54.0
	Shipping Weight		kg	61.0	61.0
	Net Dimensions	Width	mm	530	530
		Height	mm	840	840
		Depth	mm	350	350
	Shipping Dimensions	Width	mm	602	602
		Height	mm	1,032	1,032
		Depth	mm	435	435

NOTE

- Specifications may be subject to change without prior notice.
- Select wire size based on the value of MCA

3. Indoor units

3-1. Specifications

Hydro Unit, 2 zone

Model Name		Indoor Unit		AE160DNZMPK/EU	AE160DNZMPK/EU
		Outdoor Unit		AE080CXYDGK/EU	AE120CXYDGK/EU
Mode			-	Heat Pump (A2W)	Heat Pump (A2W)
Power Supply			Φ, #, V, Hz	3, 4, 380-415, 50	3, 4, 380-415, 50
Power input	Cooling (Nominal)		kW	3Φ - / 1Φ 0.3	3Φ - / 1Φ 0.3
	Heating (Nominal)		kW	3Φ - / 1Φ 0.3	3Φ - / 1Φ 0.3
	Cooling (Max)		kW	3Φ - / 1Φ 0.3	3Φ - / 1Φ 0.3
	Heating (Max)		kW	3Φ 6.0 / 1Φ 0.3	3Φ 6.0 / 1Φ 0.3
Current Input	Cooling (Nominal)		A	3Φ - / 1Φ 1.3	3Φ - / 1Φ 1.3
	Heating (Nominal)		A	3Φ - / 1Φ 1.3	3Φ - / 1Φ 1.3
	Cooling (Max)		A	3Φ - / 1Φ 1.3	3Φ - / 1Φ 1.3
	Heating (Max)		A	3Φ 8.7 / 1Φ 1.3	3Φ 8.7 / 1Φ 1.3
Field Wiring	MCA		A	3Φ 8.7 / 1Φ 1.3	3Φ 8.7 / 1Φ 1.3
	MFA		A	3Φ 10.9 / 1Φ 1.6	3Φ 10.9 / 1Φ 1.6
Connections	Water Flow Rate (Std)	Heating	LPM	23.1	34.6
		Cooling	LPM	23.1	34.6
	Water Flow Rate	Min	LPM	7	7
		Max	LPM	48	58
	Water Pressure (Max)		bar	3.0	3.0
	Water pipe (To outdoor unit)	Type	-	BSPP Female 1 1/4	BSPP Female 1 1/4
		Inlet	Φ, mm	28	28
		Outlet	Φ, mm	28	28
	Water pipe (Space heating) (Zone 1)	Type	-	BSPP Female 1 1/4	BSPP Female 1 1/4
		Inlet	Φ, mm	28	28
		Outlet	Φ, mm	28	28
	Water pipe (Space heating) (Zone 2)	Type	-	BSPP Female 1 1/4	BSPP Female 1 1/4
		Inlet	Φ, mm	28	28
		Outlet	Φ, mm	28	28
	Water pipe (Tank)	Type	-	BSPP Female 1 1/4	BSPP Female 1 1/4
		Inlet	Φ, mm	28	28
		Outlet	Φ, mm	28	28
	Leaving Water Temperature	Heating Min.	°C	15	15
		Heating Max.	°C	75	75
		Cooling Min.	°C	5	5
		Cooling Max.	°C	25	25
Water Pump	Type		-	BLDC Inv	BLDC Inv
	Motor Input		W	95	95
	Number of Unit		EA	2	2
	Max static pressure		mAq	9	9
Backup Heater	Power		kW	3Φ 6kW	3Φ 6kW
	Thermostat (Thermal Fuse)		°C	98 +0 -5	98 +0 -5
Safety device	Pressure relief valve		bar	2.9	2.9
	Flow Sensor		LPM	5~60	5~60
Expansion vessel	Internal water volume		liter	10	10
	Max. Working pressure		MPa	0.3	0.3
	Initial Charging pressure		MPa	0.12	0.12
Air Purge Valve			Φ, inch	BSPP male 3/8"	BSPP male 3/8"
Service Valve			Φ, inch	BSPP male 1 1/4	BSPP male 1 1/4

3. Indoor units

3-1. Specifications

Hydro Unit, 2 zone

Model Name		Indoor Unit		AE160DNZMPK/EU	AE160DNZMPK/EU
		Outdoor Unit		AE080CXYDGK/EU	AE120CXYDGK/EU
Sound Level	Sound Pressure Level	Heating	dB(A)	28	30
		Cooling	dB(A)	28	30
	Sound Power Level	Heating	dB(A)	42	44
Casing	Color		-	GREIGE	GREIGE
	Material		-	PCM	PCM
Packing	Material		-	EPS/BOX	EPS/BOX
	Packing Weight		kg	3.7	3.7
External Dimension	Net Weight		kg	54.0	54.0
	Shipping Weight		kg	61.0	61.0
	Net Dimensions	Width	mm	530	530
		Height	mm	840	840
		Depth	mm	350	350
	Shipping Dimensions	Width	mm	602	602
		Height	mm	1,032	1,032
		Depth	mm	435	435

NOTE

- Specifications may be subject to change without prior notice.
- Select wire size based on the value of MCA

3. Indoor units

3-1. Specifications

Hydro Unit, 2 zone

Model Name		Indoor Unit		AE160DNZMPK/EU	AE160DNZMPK/EU
		Outdoor Unit		AE160CXYDGK/EU	AE080BXYDEG/EU
Mode			-	Heat Pump (A2W)	Heat Pump (A2W)
Power Supply			Φ, #, V, Hz	3, 4, 380-415, 50	1, 2, 220-240, 50
Power input	Cooling (Nominal)		kW	3Φ - / 1Φ 0.3	0.3
	Heating (Nominal)		kW	3Φ - / 1Φ 0.3	0.3
	Cooling (Max)		kW	3Φ - / 1Φ 0.3	0.3
	Heating (Max)		kW	3Φ 6.0 / 1Φ 0.3	4.3
Current Input	Cooling (Nominal)		A	3Φ - / 1Φ 1.3	1.3
	Heating (Nominal)		A	3Φ - / 1Φ 1.3	1.3
	Cooling (Max)		A	3Φ - / 1Φ 1.3	1.3
	Heating (Max)		A	3Φ 8.7 / 1Φ 1.3	18.7
Field Wiring	MCA		A	3Φ 8.7 / 1Φ 1.3	18.7
	MFA		A	3Φ 10.9 / 1Φ 1.6	23.4
Connections	Water Flow Rate (Std)	Heating	LPM	46.2	23.1
		Cooling	LPM	40.4	23.1
	Water Flow Rate	Min	LPM	7	7
		Max	LPM	58	48
	Water Pressure (Max)		bar	3.0	3.0
	Water pipe (To outdoor unit)	Type	-	BSPP Female 1 1/4	BSPP Female 1 1/4
		Inlet	Φ, mm	28	28
		Outlet	Φ, mm	28	28
	Water pipe (Space heating) (Zone 1)	Type	-	BSPP Female 1 1/4	BSPP Female 1 1/4
		Inlet	Φ, mm	28	28
		Outlet	Φ, mm	28	28
	Water pipe (Space heating) (Zone 2)	Type	-	BSPP Female 1 1/4	BSPP Female 1 1/4
		Inlet	Φ, mm	28	28
		Outlet	Φ, mm	28	28
	Water pipe (Tank)	Type	-	BSPP Female 1 1/4	BSPP Female 1 1/4
		Inlet	Φ, mm	28	28
		Outlet	Φ, mm	28	28
	Leaving Water Temperature	Heating Min.	°C	15	15
		Heating Max.	°C	75	70
		Cooling Min.	°C	5	5
		Cooling Max.	°C	25	25
Water Pump	Type		-	BLDC Inv	BLDC Inv
	Motor Input		W	95	95
	Number of Unit		EA	2	2
	Max static pressure		mAq	9	9
Backup Heater	Power		kW	3Φ 6kW	1Φ 2/4kW
	Thermostat (Thermal Fuse)		°C	98 +0 -5	98 +0 -5
Safety device	Pressure relief valve		bar	2.9	2.9
	Flow Sensor		LPM	5~60	5~60
Expansion vessel	Internal water volume		liter	10	10
	Max. Working pressure		MPa	0.3	0.3
	Initial Charging pressure		MPa	0.12	0.12
Air Purge Valve			Φ, inch	BSPP male 3/8"	BSPP male 3/8"
Service Valve			Φ, inch	BSPP male 1 1/4	BSPP male 1 1/4

3. Indoor units

3-1. Specifications

Hydro Unit, 2 zone

Model Name		Indoor Unit		AE160DNZMPK/EU	AE160DNZMPK/EU
		Outdoor Unit		AE160CXYDGK/EU	AE080BXYDEG/EU
Sound Level	Sound Pressure Level	Heating	dB(A)	30	28
		Cooling	dB(A)	30	28
	Sound Power Level	Heating	dB(A)	44	42
Casing	Color		-	GREIGE	GREIGE
	Material		-	PCM	PCM
Packing	Material		-	EPS/BOX	EPS/BOX
	Packing Weight		kg	3.7	3.7
External Dimension	Net Weight		kg	54.0	54.0
	Shipping Weight		kg	61.0	61.0
	Net Dimensions	Width	mm	530	530
		Height	mm	840	840
		Depth	mm	350	350
	Shipping Dimensions	Width	mm	602	602
		Height	mm	1,032	1,032
		Depth	mm	435	435

NOTE

- Specifications may be subject to change without prior notice.
- Select wire size based on the value of MCA

3. Indoor units

3-1. Specifications

Hydro Unit, 2 zone

Model Name		Indoor Unit		AE160DNZMPK/EU	AE160DNZMPK/EU
		Outdoor Unit		AE120BXYDEG/EU	AE140BXYDEG/EU
Mode			-	Heat Pump (A2W)	Heat Pump (A2W)
Power Supply			Φ, #, V, Hz	1, 2, 220-240, 50	1, 2, 220-240, 50
Power input	Cooling (Nominal)		kW	0.3	0.3
	Heating (Nominal)		kW	0.3	0.3
	Cooling (Max)		kW	0.3	0.3
	Heating (Max)		kW	4.3	4.3
Current Input	Cooling (Nominal)		A	1.3	1.3
	Heating (Nominal)		A	1.3	1.3
	Cooling (Max)		A	1.3	1.3
	Heating (Max)		A	18.7	18.7
Field Wiring	MCA		A	18.7	18.7
	MFA		A	23.4	23.4
Connections	Water Flow Rate (Std)	Heating	LPM	34.6	34.6
		Cooling	LPM	34.6	34.6
	Water Flow Rate	Min	LPM	7	7
		Max	LPM	58	58
	Water Pressure (Max)		bar	3.0	3.0
	Water pipe (To outdoor unit)	Type	-	BSPP Female 1 1/4	BSPP Female 1 1/4
		Inlet	Φ, mm	28	28
		Outlet	Φ, mm	28	28
	Water pipe (Space heating) (Zone 1)	Type	-	BSPP Female 1 1/4	BSPP Female 1 1/4
		Inlet	Φ, mm	28	28
		Outlet	Φ, mm	28	28
	Water pipe (Space heating) (Zone 2)	Type	-	BSPP Female 1 1/4	BSPP Female 1 1/4
		Inlet	Φ, mm	28	28
		Outlet	Φ, mm	28	28
	Water pipe (Tank)	Type	-	BSPP Female 1 1/4	BSPP Female 1 1/4
		Inlet	Φ, mm	28	28
		Outlet	Φ, mm	28	28
	Leaving Water Temperature	Heating Min.	°C	15	15
		Heating Max.	°C	70	70
		Cooling Min.	°C	5	5
		Cooling Max.	°C	25	25
Water Pump	Type		-	BLDC Inv	BLDC Inv
	Motor Input		W	95	95
	Number of Unit		EA	2	2
	Max static pressure		mAq	9	9
Backup Heater	Power		kW	1Φ 2/4kW	1Φ 2/4kW
	Thermostat (Thermal Fuse)		°C	98 +0 -5	98 +0 -5
Safety device	Pressure relief valve		bar	2.9	2.9
	Flow Sensor		LPM	5~60	5~60
Expansion vessel	Internal water volume		liter	10	10
	Max. Working pressure		MPa	0.3	0.3
	Initial Charging pressure		MPa	0.12	0.12
Air Purge Valve			Φ, inch	BSPP male 3/8"	BSPP male 3/8"
Service Valve			Φ, inch	BSPP male 1 1/4	BSPP male 1 1/4

3. Indoor units

3-1. Specifications

Hydro Unit, 2 zone

Model Name		Indoor Unit		AE160DNZMPK/EU	AE160DNZMPK/EU
		Outdoor Unit		AE120BXYDEG/EU	AE140BXYDEG/EU
Sound Level	Sound Pressure Level	Heating	dB(A)	30	30
		Cooling	dB(A)	30	30
	Sound Power Level	Heating	dB(A)	44	44
Casing	Color		-	GREIGE	GREIGE
	Material		-	PCM	PCM
Packing	Material		-	EPS/BOX	EPS/BOX
	Packing Weight		kg	3.7	3.7
External Dimension	Net Weight		kg	54.0	54.0
	Shipping Weight		kg	61.0	61.0
	Net Dimensions	Width	mm	530	530
		Height	mm	840	840
		Depth	mm	350	350
	Shipping Dimensions	Width	mm	602	602
		Height	mm	1,032	1,032
		Depth	mm	435	435

NOTE

- Specifications may be subject to change without prior notice.
- Select wire size based on the value of MCA

3. Indoor units

3-1. Specifications

Hydro Unit, 2 zone

Model Name		Indoor Unit		AE160DNZMPK/EU	AE160DNZMPK/EU
		Outdoor Unit		AE080BXYDGG/EU	AE120BXYDGG/EU
Mode			-	Heat Pump (A2W)	Heat Pump (A2W)
Power Supply			Φ, #, V, Hz	3, 4, 380-415, 50	3, 4, 380-415, 50
Power input	Cooling (Nominal)		kW	3Φ - / 1Φ 0.3	3Φ - / 1Φ 0.3
	Heating (Nominal)		kW	3Φ - / 1Φ 0.3	3Φ - / 1Φ 0.3
	Cooling (Max)		kW	3Φ - / 1Φ 0.3	3Φ - / 1Φ 0.3
	Heating (Max)		kW	3Φ 6.0 / 1Φ 0.3	3Φ 6.0 / 1Φ 0.3
Current Input	Cooling (Nominal)		A	3Φ - / 1Φ 1.3	3Φ - / 1Φ 1.3
	Heating (Nominal)		A	3Φ - / 1Φ 1.3	3Φ - / 1Φ 1.3
	Cooling (Max)		A	3Φ - / 1Φ 1.3	3Φ - / 1Φ 1.3
	Heating (Max)		A	3Φ 8.7 / 1Φ 1.3	3Φ 8.7 / 1Φ 1.3
Field Wiring	MCA		A	3Φ 8.7 / 1Φ 1.3	3Φ 8.7 / 1Φ 1.3
	MFA		A	3Φ 10.9 / 1Φ 1.6	3Φ 10.9 / 1Φ 1.6
Connections	Water Flow Rate (Std)	Heating	LPM	23.1	34.6
		Cooling	LPM	23.1	34.6
	Water Flow Rate	Min	LPM	7	7
		Max	LPM	48	58
	Water Pressure (Max)		bar	3.0	3.0
	Water pipe (To outdoor unit)	Type	-	BSPP Female 1 1/4	BSPP Female 1 1/4
		Inlet	Φ, mm	28	28
		Outlet	Φ, mm	28	28
	Water pipe (Space heating) (Zone 1)	Type	-	BSPP Female 1 1/4	BSPP Female 1 1/4
		Inlet	Φ, mm	28	28
		Outlet	Φ, mm	28	28
	Water pipe (Space heating) (Zone 2)	Type	-	BSPP Female 1 1/4	BSPP Female 1 1/4
		Inlet	Φ, mm	28	28
		Outlet	Φ, mm	28	28
	Water pipe (Tank)	Type	-	BSPP Female 1 1/4	BSPP Female 1 1/4
		Inlet	Φ, mm	28	28
		Outlet	Φ, mm	28	28
	Leaving Water Temperature	Heating Min.	°C	15	15
		Heating Max.	°C	70	70
		Cooling Min.	°C	5	5
		Cooling Max.	°C	25	25
Water Pump	Type		-	BLDC Inv	BLDC Inv
	Motor Input		W	95	95
	Number of Unit		EA	2	2
	Max static pressure		mAq	9	9
Backup Heater	Power		kW	3Φ 6kW	3Φ 6kW
	Thermostat (Thermal Fuse)		°C	98 +0 -5	98 +0 -5
Safety device	Pressure relief valve		bar	2.9	2.9
	Flow Sensor		LPM	5~60	5~60
Expansion vessel	Internal water volume		liter	10	10
	Max. Working pressure		MPa	0.3	0.3
	Initial Charging pressure		MPa	0.12	0.12
Air Purge Valve			Φ, inch	BSPP male 3/8"	BSPP male 3/8"
Service Valve			Φ, inch	BSPP male 1 1/4	BSPP male 1 1/4

3. Indoor units

3-1. Specifications

Hydro Unit, 2 zone

Model Name		Indoor Unit		AE160DNZMPK/EU	AE160DNZMPK/EU
		Outdoor Unit		AE080BXYDGG/EU	AE120BXYDGG/EU
Sound Level	Sound Pressure Level	Heating	dB(A)	28	30
		Cooling	dB(A)	28	30
	Sound Power Level	Heating	dB(A)	42	44
Casing	Color		-	GREIGE	GREIGE
	Material		-	PCM	PCM
Packing	Material		-	EPS/BOX	EPS/BOX
	Packing Weight		kg	3.7	3.7
External Dimension	Net Weight		kg	54.0	54.0
	Shipping Weight		kg	61.0	61.0
	Net Dimensions	Width	mm	530	530
		Height	mm	840	840
		Depth	mm	350	350
	Shipping Dimensions	Width	mm	602	602
		Height	mm	1,032	1,032
		Depth	mm	435	435

NOTE

- Specifications may be subject to change without prior notice.
- Select wire size based on the value of MCA

3. Indoor units

3-1. Specifications

Hydro Unit, 2 zone

Model Name		Indoor Unit		AE160DNZMPK/EU	AE160DNZMPK/EU
		Outdoor Unit		AE140BXYDGG/EU	AE050RXYDEG/EU
Mode			-	Heat Pump (A2W)	Heat Pump (A2W)
Power Supply			Φ, #, V, Hz	3, 4, 380-415, 50	1, 2, 220-240, 50
Power input	Cooling (Nominal)		kW	3Φ - / 1Φ 0.3	0.3
	Heating (Nominal)		kW	3Φ - / 1Φ 0.3	0.3
	Cooling (Max)		kW	3Φ - / 1Φ 0.3	0.3
	Heating (Max)		kW	3Φ 6.0 / 1Φ 0.3	4.3
Current Input	Cooling (Nominal)		A	3Φ - / 1Φ 1.3	1.3
	Heating (Nominal)		A	3Φ - / 1Φ 1.3	1.3
	Cooling (Max)		A	3Φ - / 1Φ 1.3	1.3
	Heating (Max)		A	3Φ 8.7 / 1Φ 1.3	18.7
Field Wiring	MCA		A	3Φ 8.7 / 1Φ 1.3	18.7
	MFA		A	3Φ 10.9 / 1Φ 1.6	23.4
Connections	Water Flow Rate (Std)	Heating	LPM	34.6	14.4
		Cooling	LPM	34.6	14.4
	Water Flow Rate	Min	LPM	7	7
		Max	LPM	58	48
	Water Pressure (Max)		bar	3.0	3.0
	Water pipe (To outdoor unit)	Type	-	BSPP Female 1 1/4	BSPP Female 1 1/4
		Inlet	Φ, mm	28	28
		Outlet	Φ, mm	28	28
	Water pipe (Space heating) (Zone 1)	Type	-	BSPP Female 1 1/4	BSPP Female 1 1/4
		Inlet	Φ, mm	28	28
		Outlet	Φ, mm	28	28
	Water pipe (Space heating) (Zone 2)	Type	-	BSPP Female 1 1/4	BSPP Female 1 1/4
		Inlet	Φ, mm	28	28
		Outlet	Φ, mm	28	28
	Water pipe (Tank)	Type	-	BSPP Female 1 1/4	BSPP Female 1 1/4
		Inlet	Φ, mm	28	28
		Outlet	Φ, mm	28	28
	Leaving Water Temperature	Heating Min.	°C	15	15
		Heating Max.	°C	70	65
		Cooling Min.	°C	5	5
		Cooling Max.	°C	25	25
Water Pump	Type		-	BLDC Inv	BLDC Inv
	Motor Input		W	95	95
	Number of Unit		EA	2	2
	Max static pressure		mAq	9	9
Backup Heater	Power		kW	3Φ 6kW	1Φ 2/4kW
	Thermostat (Thermal Fuse)		°C	98 +0 -5	98 +0 -5
Safety device	Pressure relief valve		bar	2.9	2.9
	Flow Sensor		LPM	5~60	5~60
Expansion vessel	Internal water volume		liter	10	10
	Max. Working pressure		MPa	0.3	0.3
	Initial Charging pressure		MPa	0.12	0.12
Air Purge Valve			Φ, inch	BSPP male 3/8"	BSPP male 3/8"
Service Valve			Φ, inch	BSPP male 1 1/4	BSPP male 1 1/4

3. Indoor units

3-1. Specifications

Hydro Unit, 2 zone

Model Name		Indoor Unit		AE160DNZMPK/EU	AE160DNZMPK/EU
		Outdoor Unit		AE140BXYDGG/EU	AE050RXYDEG/EU
Sound Level	Sound Pressure Level	Heating	dB(A)	30	28
		Cooling	dB(A)	30	28
	Sound Power Level	Heating	dB(A)	44	42
Casing	Color		-	GREIGE	GREIGE
	Material		-	PCM	PCM
Packing	Material		-	EPS/BOX	EPS/BOX
	Packing Weight		kg	3.7	3.7
External Dimension	Net Weight		kg	54.0	54.0
	Shipping Weight		kg	61.0	61.0
	Net Dimensions	Width	mm	530	530
		Height	mm	840	840
		Depth	mm	350	350
	Shipping Dimensions	Width	mm	602	602
		Height	mm	1,032	1,032
		Depth	mm	435	435

NOTE

- Specifications may be subject to change without prior notice.
- Select wire size based on the value of MCA

3. Indoor units

3-1. Specifications

Hydro Unit, 2 zone

Model Name		Indoor Unit		AE160DNZMPK/EU	AE160DNZMPK/EU
		Outdoor Unit		AE080RXYDEG/EU	AE120RXYDEG/EU
Mode			-	Heat Pump (A2W)	Heat Pump (A2W)
Power Supply			Φ, #, V, Hz	1, 2, 220-240, 50	1, 2, 220-240, 50
Power input	Cooling (Nominal)		kW	0.3	0.3
	Heating (Nominal)		kW	0.3	0.3
	Cooling (Max)		kW	0.3	0.3
	Heating (Max)		kW	4.3	4.3
Current Input	Cooling (Nominal)		A	1.3	1.3
	Heating (Nominal)		A	1.3	1.3
	Cooling (Max)		A	1.3	1.3
	Heating (Max)		A	18.7	18.7
Field Wiring	MCA		A	18.7	18.7
	MFA		A	23.4	23.4
Connections	Water Flow Rate (Std)	Heating	LPM	23.1	34.6
		Cooling	LPM	21.6	34.6
	Water Flow Rate	Min	LPM	7	12
		Max	LPM	48	58
	Water Pressure (Max)		bar	3.0	3.0
	Water pipe (To outdoor unit)	Type	-	BSPP Female 1 1/4	BSPP Female 1 1/4
		Inlet	Φ, mm	28	28
		Outlet	Φ, mm	28	28
	Water pipe (Space heating) (Zone 1)	Type	-	BSPP Female 1 1/4	BSPP Female 1 1/4
		Inlet	Φ, mm	28	28
		Outlet	Φ, mm	28	28
	Water pipe (Space heating) (Zone 2)	Type	-	BSPP Female 1 1/4	BSPP Female 1 1/4
		Inlet	Φ, mm	28	28
		Outlet	Φ, mm	28	28
	Water pipe (Tank)	Type	-	BSPP Female 1 1/4	BSPP Female 1 1/4
		Inlet	Φ, mm	28	28
		Outlet	Φ, mm	28	28
	Leaving Water Temperature	Heating Min.	°C	15	15
		Heating Max.	°C	65	65
		Cooling Min.	°C	5	5
		Cooling Max.	°C	25	25
Water Pump	Type		-	BLDC Inv	BLDC Inv
	Motor Input		W	95	95
	Number of Unit		EA	2	2
	Max static pressure		mAq	9	9
Backup Heater	Power		kW	1Φ 2/4kW	1Φ 2/4kW
	Thermostat (Thermal Fuse)		°C	98 +0 -5	98 +0 -5
Safety device	Pressure relief valve		bar	2.9	2.9
	Flow Sensor		LPM	5~60	5~60
Expansion vessel	Internal water volume		liter	10	10
	Max. Working pressure		MPa	0.3	0.3
	Initial Charging pressure		MPa	0.12	0.12
Air Purge Valve			Φ, inch	BSPP male 3/8"	BSPP male 3/8"
Service Valve			Φ, inch	BSPP male 1 1/4	BSPP male 1 1/4

3. Indoor units

3-1. Specifications

Hydro Unit, 2 zone

Model Name		Indoor Unit		AE160DNZMPK/EU	AE160DNZMPK/EU
		Outdoor Unit		AE080RXYDEG/EU	AE120RXYDEG/EU
Sound Level	Sound Pressure Level	Heating	dB(A)	28	30
		Cooling	dB(A)	28	30
	Sound Power Level	Heating	dB(A)	42	44
Casing	Color		-	GREIGE	GREIGE
	Material		-	PCM	PCM
Packing	Material		-	EPS/BOX	EPS/BOX
	Packing Weight		kg	3.7	3.7
External Dimension	Net Weight		kg	54.0	54.0
	Shipping Weight		kg	61.0	61.0
	Net Dimensions	Width	mm	530	530
		Height	mm	840	840
		Depth	mm	350	350
	Shipping Dimensions	Width	mm	602	602
		Height	mm	1,032	1,032
		Depth	mm	435	435

NOTE

- Specifications may be subject to change without prior notice.
- Select wire size based on the value of MCA

3. Indoor units

3-1. Specifications

Hydro Unit, 2 zone

Model Name		Indoor Unit		AE160DNZMPK/EU	AE160DNZMPK/EU
		Outdoor Unit		AE160RXYDEG/EU	AE080RXYDGG/EU
Mode			-	Heat Pump (A2W)	Heat Pump (A2W)
Power Supply			Φ, #, V, Hz	1, 2, 220-240, 50	3, 4, 380-415, 50
Power input	Cooling (Nominal)		kW	0.3	3Φ - / 1Φ 0.3
	Heating (Nominal)		kW	0.3	3Φ - / 1Φ 0.3
	Cooling (Max)		kW	0.3	3Φ - / 1Φ 0.3
	Heating (Max)		kW	4.3	3Φ 6.0 / 1Φ 0.3
Current Input	Cooling (Nominal)		A	1.3	3Φ - / 1Φ 1.3
	Heating (Nominal)		A	1.3	3Φ - / 1Φ 1.3
	Cooling (Max)		A	1.3	3Φ - / 1Φ 1.3
	Heating (Max)		A	18.7	3Φ 8.7 / 1Φ 1.3
Field Wiring	MCA		A	18.7	3Φ 8.7 / 1Φ 1.3
	MFA		A	23.4	3Φ 10.9 / 1Φ 1.6
Connections	Water Flow Rate (Std)	Heating	LPM	46.2	23.1
		Cooling	LPM	40.4	21.6
	Water Flow Rate	Min	LPM	12	7
		Max	LPM	58	48
	Water Pressure (Max)		bar	3.0	3.0
	Water pipe (To outdoor unit)	Type	-	BSPP Female 1 1/4	BSPP Female 1 1/4
		Inlet	Φ, mm	28	28
		Outlet	Φ, mm	28	28
	Water pipe (Space heating) (Zone 1)	Type	-	BSPP Female 1 1/4	BSPP Female 1 1/4
		Inlet	Φ, mm	28	28
		Outlet	Φ, mm	28	28
	Water pipe (Space heating) (Zone 2)	Type	-	BSPP Female 1 1/4	BSPP Female 1 1/4
		Inlet	Φ, mm	28	28
		Outlet	Φ, mm	28	28
	Water pipe (Tank)	Type	-	BSPP Female 1 1/4	BSPP Female 1 1/4
		Inlet	Φ, mm	28	28
		Outlet	Φ, mm	28	28
	Leaving Water Temperature	Heating Min.	°C	15	15
		Heating Max.	°C	65	65
		Cooling Min.	°C	5	5
		Cooling Max.	°C	25	25
Water Pump	Type		-	BLDC Inv	BLDC Inv
	Motor Input		W	95	95
	Number of Unit		EA	2	2
	Max static pressure		mAq	9	9
Backup Heater	Power		kW	1Φ 2/4kW	3Φ 6kW
	Thermostat (Thermal Fuse)		°C	98 +0 -5	98 +0 -5
Safety device	Pressure relief valve		bar	2.9	2.9
	Flow Sensor		LPM	5~60	5~60
Expansion vessel	Internal water volume		liter	10	10
	Max. Working pressure		MPa	0.3	0.3
	Initial Charging pressure		MPa	0.12	0.12
Air Purge Valve			Φ, inch	BSPP male 3/8"	BSPP male 3/8"
Service Valve			Φ, inch	BSPP male 1 1/4	BSPP male 1 1/4

3. Indoor units

3-1. Specifications

Hydro Unit, 2 zone

Model Name		Indoor Unit		AE160DNZMPK/EU	AE160DNZMPK/EU
		Outdoor Unit		AE160RXYDEG/EU	AE080RXYDGG/EU
Sound Level	Sound Pressure Level	Heating	dB(A)	30	28
		Cooling	dB(A)	30	28
	Sound Power Level	Heating	dB(A)	44	42
Casing	Color		-	GREIGE	GREIGE
	Material		-	PCM	PCM
Packing	Material		-	EPS/BOX	EPS/BOX
	Packing Weight		kg	3.7	3.7
External Dimension	Net Weight		kg	54.0	54.0
	Shipping Weight		kg	61.0	61.0
	Net Dimensions	Width	mm	530	530
		Height	mm	840	840
		Depth	mm	350	350
	Shipping Dimensions	Width	mm	602	602
		Height	mm	1,032	1,032
		Depth	mm	435	435

NOTE

- Specifications may be subject to change without prior notice.
- Select wire size based on the value of MCA

3. Indoor units

3-1. Specifications

Hydro Unit, 2 zone

Model Name		Indoor Unit		AE160DNZMPK/EU	AE160DNZMPK/EU
		Outdoor Unit		AE120RXYDGG/EU	AE160RXYDGG/EU
Mode			-	Heat Pump (A2W)	Heat Pump (A2W)
Power Supply			Φ, #, V, Hz	3, 4, 380-415, 50	3, 4, 380-415, 50
Power input	Cooling (Nominal)		kW	3Φ - / 1Φ 0.3	3Φ - / 1Φ 0.3
	Heating (Nominal)		kW	3Φ - / 1Φ 0.3	3Φ - / 1Φ 0.3
	Cooling (Max)		kW	3Φ - / 1Φ 0.3	3Φ - / 1Φ 0.3
	Heating (Max)		kW	3Φ 6.0 / 1Φ 0.3	3Φ 6.0 / 1Φ 0.3
Current Input	Cooling (Nominal)		A	3Φ - / 1Φ 1.3	3Φ - / 1Φ 1.3
	Heating (Nominal)		A	3Φ - / 1Φ 1.3	3Φ - / 1Φ 1.3
	Cooling (Max)		A	3Φ - / 1Φ 1.3	3Φ - / 1Φ 1.3
	Heating (Max)		A	3Φ 8.7 / 1Φ 1.3	3Φ 8.7 / 1Φ 1.3
Field Wiring	MCA		A	3Φ 8.7 / 1Φ 1.3	3Φ 8.7 / 1Φ 1.3
	MFA		A	3Φ 10.9 / 1Φ 1.6	3Φ 10.9 / 1Φ 1.6
Connections	Water Flow Rate (Std)	Heating	LPM	34.6	46.2
		Cooling	LPM	34.6	40.4
	Water Flow Rate	Min	LPM	12	12
		Max	LPM	58	58
	Water Pressure (Max)		bar	3.0	3.0
	Water pipe (To outdoor unit)	Type	-	BSPP Female 1 1/4	BSPP Female 1 1/4
		Inlet	Φ, mm	28	28
		Outlet	Φ, mm	28	28
	Water pipe (Space heating) (Zone 1)	Type	-	BSPP Female 1 1/4	BSPP Female 1 1/4
		Inlet	Φ, mm	28	28
		Outlet	Φ, mm	28	28
	Water pipe (Space heating) (Zone 2)	Type	-	BSPP Female 1 1/4	BSPP Female 1 1/4
		Inlet	Φ, mm	28	28
		Outlet	Φ, mm	28	28
	Water pipe (Tank)	Type	-	BSPP Female 1 1/4	BSPP Female 1 1/4
		Inlet	Φ, mm	28	28
		Outlet	Φ, mm	28	28
	Leaving Water Temperature	Heating Min.	°C	15	15
		Heating Max.	°C	65	65
		Cooling Min.	°C	5	5
		Cooling Max.	°C	25	25
Water Pump	Type		-	BLDC Inv	BLDC Inv
	Motor Input		W	95	95
	Number of Unit		EA	2	2
	Max static pressure		mAq	9	9
Backup Heater	Power		kW	3Φ 6kW	3Φ 6kW
	Thermostat (Thermal Fuse)		°C	98 +0 -5	98 +0 -5
Safety device	Pressure relief valve		bar	2.9	2.9
	Flow Sensor		LPM	5~60	5~60
Expansion vessel	Internal water volume		liter	10	10
	Max. Working pressure		MPa	0.3	0.3
	Initial Charging pressure		MPa	0.12	0.12
Air Purge Valve			Φ, inch	BSPP male 3/8"	BSPP male 3/8"
Service Valve			Φ, inch	BSPP male 1 1/4	BSPP male 1 1/4

3. Indoor units

3-1. Specifications

Hydro Unit, 2 zone

Model Name		Indoor Unit		AE160DNZMPK/EU	AE160DNZMPK/EU
		Outdoor Unit		AE120RXYDGG/EU	AE160RXYDGG/EU
Sound Level	Sound Pressure Level	Heating	dB(A)	30	30
		Cooling	dB(A)	30	30
	Sound Power Level	Heating	dB(A)	44	44
Casing	Color		-	GREIGE	GREIGE
	Material		-	PCM	PCM
Packing	Material		-	EPS/BOX	EPS/BOX
	Packing Weight		kg	3.7	3.7
External Dimension	Net Weight		kg	54.0	54.0
	Shipping Weight		kg	61.0	61.0
	Net Dimensions	Width	mm	530	530
		Height	mm	840	840
		Depth	mm	350	350
	Shipping Dimensions	Width	mm	602	602
		Height	mm	1,032	1,032
		Depth	mm	435	435

NOTE

- Specifications may be subject to change without prior notice.
- Select wire size based on the value of MCA

3. Indoor units

3-1. Specifications

Hydro Unit

Model Name		Indoor Unit		AE160DNYMPK/EU	AE160DNYMPK/EU
		Outdoor Unit		AE050CXYDEK/EU	AE080CXYDEK/EU
Mode			-	Heat Pump (A2W)	Heat Pump (A2W)
Power Supply			Φ, #, V, Hz	1, 2, 220-240, 50	1, 2, 220-240, 50
Power input	Cooling (Nominal)		kW	0.2	0.2
	Heating (Nominal)		kW	0.2	0.2
	Cooling (Max)		kW	0.2	0.2
	Heating (Max)		kW	4.2	4.2
Current Input	Cooling (Nominal)		A	0.9	0.9
	Heating (Nominal)		A	0.9	0.9
	Cooling (Max)		A	0.9	0.9
	Heating (Max)		A	18.3	18.3
Field Wiring	MCA		A	18.3	18.3
	MFA		A	22.9	22.9
Connections	Water Flow Rate (Std)	Heating	LPM	14.4	23.1
		Cooling	LPM	14.4	23.1
	Water Flow Rate	Min	LPM	7	7
		Max	LPM	48	48
	Water Pressure (Max)		bar	3.0	3.0
	Water pipe (To outdoor unit)	Type	-	BSPP Female 1 1/4	BSPP Female 1 1/4
		Inlet	Φ, mm	28	28
		Outlet	Φ, mm	28	28
	Water pipe (Space heating) (Zone 1)	Type	-	BSPP Female 1 1/4	BSPP Female 1 1/4
		Inlet	Φ, mm	28	28
		Outlet	Φ, mm	28	28
	Water pipe (Tank)	Type	-	BSPP Female 1 1/4	BSPP Female 1 1/4
		Inlet	Φ, mm	28	28
		Outlet	Φ, mm	28	28
	Leaving Water Temperature	Heating Min.	°C	15	15
		Heating Max.	°C	75	75
		Cooling Min.	°C	5	5
		Cooling Max.	°C	25	25
Water Pump	Type		-	BLDC Inv	BLDC Inv
	Motor Input		W	95	95
	Number of Unit		EA	1	1
	Max static pressure		mAq	9	9
Backup Heater	Power		kW	1Φ 2/4kW	1Φ 2/4kW
	Thermostat (Thermal Fuse)		°C	98 +0 -5	98 +0 -5
Safety device	Pressure relief valve		bar	2.9	2.9
	Flow Sensor		LPM	5~60	5~60
Expansion vessel	Internal water volume		liter	10	10
	Max. Working pressure		MPa	0.3	0.3
	Initial Charging pressure		MPa	0.12	0.12
Air Purge Valve			Φ, inch	BSPP male 3/8"	BSPP male 3/8"
Service Valve			Φ, inch	BSPP male 1 1/4	BSPP male 1 1/4

3. Indoor units

3-1. Specifications

Hydro Unit

Model Name		Indoor Unit		AE160DNYMPK/EU	AE160DNYMPK/EU
		Outdoor Unit		AE050CXYDEK/EU	AE080CXYDEK/EU
Sound Level	Sound Pressure Level	Heating	dB(A)	26	26
		Cooling	dB(A)	26	26
	Sound Power Level	Heating	dB(A)	40	40
Casing	Color		-	GREIGE	GREIGE
	Material		-	PCM	PCM
Packing	Material		-	EPS/BOX	EPS/BOX
	Packing Weight		kg	3.7	3.7
External Dimension	Net Weight		kg	43.0	43.0
	Shipping Weight		kg	50.0	50.0
	Net Dimensions	Width	mm	530	530
		Height	mm	840	840
		Depth	mm	350	350
	Shipping Dimensions	Width	mm	602	602
		Height	mm	1,032	1,032
		Depth	mm	435	435

NOTE

- Specifications may be subject to change without prior notice.
- Select wire size based on the value of MCA

3. Indoor units

3-1. Specifications

Hydro Unit

Model Name		Indoor Unit		AE160DNYMPK/EU	AE160DNYMPK/EU
		Outdoor Unit		AE120CXYDEK/EU	AE160CXYDEK/EU
Mode			-	Heat Pump (A2W)	Heat Pump (A2W)
Power Supply			Φ, #, V, Hz	1, 2, 220-240, 50	1, 2, 220-240, 50
Power input	Cooling (Nominal)		kW	0.2	0.2
	Heating (Nominal)		kW	0.2	0.2
	Cooling (Max)		kW	0.2	0.2
	Heating (Max)		kW	4.2	4.2
Current Input	Cooling (Nominal)		A	0.9	0.9
	Heating (Nominal)		A	0.9	0.9
	Cooling (Max)		A	0.9	0.9
	Heating (Max)		A	18.3	18.3
Field Wiring	MCA		A	18.3	18.3
	MFA		A	22.9	22.9
Connections	Water Flow Rate (Std)	Heating	LPM	34.6	46.2
		Cooling	LPM	34.6	40.4
	Water Flow Rate	Min	LPM	7	7
		Max	LPM	58	58
	Water Pressure (Max)		bar	3.0	3.0
	Water pipe (To outdoor unit)	Type	-	BSPP Female 1 1/4	BSPP Female 1 1/4
		Inlet	Φ, mm	28	28
		Outlet	Φ, mm	28	28
	Water pipe (Space heating) (Zone 1)	Type	-	BSPP Female 1 1/4	BSPP Female 1 1/4
		Inlet	Φ, mm	28	28
		Outlet	Φ, mm	28	28
	Water pipe (Tank)	Type	-	BSPP Female 1 1/4	BSPP Female 1 1/4
		Inlet	Φ, mm	28	28
		Outlet	Φ, mm	28	28
	Leaving Water Temperature	Heating Min.	°C	15	15
		Heating Max.	°C	75	75
		Cooling Min.	°C	5	5
		Cooling Max.	°C	25	25
Water Pump	Type		-	BLDC Inv	BLDC Inv
	Motor Input		W	95	95
	Number of Unit		EA	1	1
	Max static pressure		mAq	9	9
Backup Heater	Power		kW	1Φ 2/4kW	1Φ 2/4kW
	Thermostat (Thermal Fuse)		°C	98 +0 -5	98 +0 -5
Safety device	Pressure relief valve		bar	2.9	2.9
	Flow Sensor		LPM	5~60	5~60
Expansion vessel	Internal water volume		liter	10	10
	Max. Working pressure		MPa	0.3	0.3
	Initial Charging pressure		MPa	0.12	0.12
Air Purge Valve			Φ, inch	BSPP male 3/8"	BSPP male 3/8"
Service Valve			Φ, inch	BSPP male 1 1/4	BSPP male 1 1/4

3. Indoor units

3-1. Specifications

Hydro Unit

Model Name		Indoor Unit		AE160DNYMPK/EU	AE160DNYMPK/EU
		Outdoor Unit		AE120CXYDEK/EU	AE160CXYDEK/EU
Sound Level	Sound Pressure Level	Heating	dB(A)	28	28
		Cooling	dB(A)	28	28
	Sound Power Level	Heating	dB(A)	42	42
Casing	Color		-	GREIGE	GREIGE
	Material		-	PCM	PCM
Packing	Material		-	EPS/BOX	EPS/BOX
	Packing Weight		kg	3.7	3.7
External Dimension	Net Weight		kg	43.0	43.0
	Shipping Weight		kg	50.0	50.0
	Net Dimensions	Width	mm	530	530
		Height	mm	840	840
		Depth	mm	350	350
	Shipping Dimensions	Width	mm	602	602
		Height	mm	1,032	1,032
		Depth	mm	435	435

NOTE

- Specifications may be subject to change without prior notice.
- Select wire size based on the value of MCA

3. Indoor units

3-1. Specifications

Hydro Unit

Model Name		Indoor Unit		AE160DNYMPK/EU	AE160DNYMPK/EU
		Outdoor Unit		AE080CXYDGK/EU	AE120CXYDGK/EU
Mode			-	Heat Pump (A2W)	Heat Pump (A2W)
Power Supply			Φ, #, V, Hz	3, 4, 380-415, 50	3, 4, 380-415, 50
Power input	Cooling (Nominal)		kW	3Φ - / 1Φ 0.2	3Φ - / 1Φ 0.2
	Heating (Nominal)		kW	3Φ - / 1Φ 0.2	3Φ - / 1Φ 0.2
	Cooling (Max)		kW	3Φ - / 1Φ 0.2	3Φ - / 1Φ 0.2
	Heating (Max)		kW	3Φ 6.0 / 1Φ 0.2	3Φ 6.0 / 1Φ 0.2
Current Input	Cooling (Nominal)		A	3Φ - / 1Φ 0.9	3Φ - / 1Φ 0.9
	Heating (Nominal)		A	3Φ - / 1Φ 0.9	3Φ - / 1Φ 0.9
	Cooling (Max)		A	3Φ - / 1Φ 0.9	3Φ - / 1Φ 0.9
	Heating (Max)		A	3Φ 8.7 / 1Φ 0.9	3Φ 8.7 / 1Φ 0.9
Field Wiring	MCA		A	3Φ 8.7 / 1Φ 0.9	3Φ 8.7 / 1Φ 0.9
	MFA		A	3Φ 10.9 / 1Φ 1.2	3Φ 10.9 / 1Φ 1.2
Connections	Water Flow Rate (Std)	Heating	LPM	23.1	34.6
		Cooling	LPM	23.1	34.6
	Water Flow Rate	Min	LPM	7	7
		Max	LPM	48	58
	Water Pressure (Max)		bar	3.0	3.0
	Water pipe (To outdoor unit)	Type	-	BSPP Female 1 1/4	BSPP Female 1 1/4
		Inlet	Φ, mm	28	28
		Outlet	Φ, mm	28	28
	Water pipe (Space heating) (Zone 1)	Type	-	BSPP Female 1 1/4	BSPP Female 1 1/4
		Inlet	Φ, mm	28	28
		Outlet	Φ, mm	28	28
	Water pipe (Tank)	Type	-	BSPP Female 1 1/4	BSPP Female 1 1/4
		Inlet	Φ, mm	28	28
		Outlet	Φ, mm	28	28
	Leaving Water Temperature	Heating Min.	°C	15	15
		Heating Max.	°C	75	75
		Cooling Min.	°C	5	5
		Cooling Max.	°C	25	25
Water Pump	Type		-	BLDC Inv	BLDC Inv
	Motor Input		W	95	95
	Number of Unit		EA	1	1
	Max static pressure		mAq	9	9
Backup Heater	Power		kW	3Φ 6kW	3Φ 6kW
	Thermostat (Thermal Fuse)		°C	98 +0 -5	98 +0 -5
Safety device	Pressure relief valve		bar	2.9	2.9
	Flow Sensor		LPM	5~60	5~60
Expansion vessel	Internal water volume		liter	10	10
	Max. Working pressure		MPa	0.3	0.3
	Initial Charging pressure		MPa	0.12	0.12
Air Purge Valve			Φ, inch	BSPP male 3/8"	BSPP male 3/8"
Service Valve			Φ, inch	BSPP male 1 1/4	BSPP male 1 1/4

3. Indoor units

3-1. Specifications

Hydro Unit

Model Name		Indoor Unit		AE160DNYMPK/EU	AE160DNYMPK/EU
		Outdoor Unit		AE080CXYDGK/EU	AE120CXYDGK/EU
Sound Level	Sound Pressure Level	Heating	dB(A)	26	28
		Cooling	dB(A)	26	28
	Sound Power Level	Heating	dB(A)	40	42
Casing	Color		-	GREIGE	GREIGE
	Material		-	PCM	PCM
Packing	Material		-	EPS/BOX	EPS/BOX
	Packing Weight		kg	3.7	3.7
External Dimension	Net Weight		kg	43.0	43.0
	Shipping Weight		kg	50.0	50.0
	Net Dimensions	Width	mm	530	530
		Height	mm	840	840
		Depth	mm	350	350
	Shipping Dimensions	Width	mm	602	602
		Height	mm	1,032	1,032
		Depth	mm	435	435

NOTE

- Specifications may be subject to change without prior notice.
- Select wire size based on the value of MCA

3. Indoor units

3-1. Specifications

Hydro Unit

Model Name		Indoor Unit		AE160DNYMPK/EU	AE160DNYMPK/EU
		Outdoor Unit		AE160CXYDGK/EU	AE080BXYDEG/EU
Mode			-	Heat Pump (A2W)	Heat Pump (A2W)
Power Supply			Φ, #, V, Hz	3, 4, 380-415, 50	1, 2, 220-240, 50
Power input	Cooling (Nominal)		kW	3Φ - / 1Φ 0.2	0.2
	Heating (Nominal)		kW	3Φ - / 1Φ 0.2	0.2
	Cooling (Max)		kW	3Φ - / 1Φ 0.2	0.2
	Heating (Max)		kW	3Φ 6.0 / 1Φ 0.2	4.2
Current Input	Cooling (Nominal)		A	3Φ - / 1Φ 0.9	0.9
	Heating (Nominal)		A	3Φ - / 1Φ 0.9	0.9
	Cooling (Max)		A	3Φ - / 1Φ 0.9	0.9
	Heating (Max)		A	3Φ 8.7 / 1Φ 0.9	18.3
Field Wiring	MCA		A	3Φ 8.7 / 1Φ 0.9	18.3
	MFA		A	3Φ 10.9 / 1Φ 1.2	22.9
Connections	Water Flow Rate (Std)	Heating	LPM	46.2	23.1
		Cooling	LPM	40.4	23.1
	Water Flow Rate	Min	LPM	7	7
		Max	LPM	58	48
	Water Pressure (Max)		bar	3.0	3.0
	Water pipe (To outdoor unit)	Type	-	BSPP Female 1 1/4	BSPP Female 1 1/4
		Inlet	Φ, mm	28	28
		Outlet	Φ, mm	28	28
	Water pipe (Space heating) (Zone 1)	Type	-	BSPP Female 1 1/4	BSPP Female 1 1/4
		Inlet	Φ, mm	28	28
		Outlet	Φ, mm	28	28
	Water pipe (Tank)	Type	-	BSPP Female 1 1/4	BSPP Female 1 1/4
		Inlet	Φ, mm	28	28
		Outlet	Φ, mm	28	28
	Leaving Water Temperature	Heating Min.	°C	15	15
		Heating Max.	°C	75	70
		Cooling Min.	°C	5	5
		Cooling Max.	°C	25	25
Water Pump	Type		-	BLDC Inv	BLDC Inv
	Motor Input		W	95	95
	Number of Unit		EA	1	1
	Max static pressure		mAq	9	9
Backup Heater	Power		kW	3Φ 6kW	1Φ 2/4kW
	Thermostat (Thermal Fuse)		°C	98 +0 -5	98 +0 -5
Safety device	Pressure relief valve		bar	2.9	2.9
	Flow Sensor		LPM	5~60	5~60
Expansion vessel	Internal water volume		liter	10	10
	Max. Working pressure		MPa	0.3	0.3
	Initial Charging pressure		MPa	0.12	0.12
Air Purge Valve			Φ, inch	BSPP male 3/8"	BSPP male 3/8"
Service Valve			Φ, inch	BSPP male 1 1/4	BSPP male 1 1/4

3. Indoor units

3-1. Specifications

Hydro Unit

Model Name		Indoor Unit		AE160DNYMPK/EU	AE160DNYMPK/EU
		Outdoor Unit		AE160CXYDGK/EU	AE080BXYDEG/EU
Sound Level	Sound Pressure Level	Heating	dB(A)	28	26
		Cooling	dB(A)	28	26
	Sound Power Level	Heating	dB(A)	42	40
Casing	Color		-	GREIGE	GREIGE
	Material		-	PCM	PCM
Packing	Material		-	EPS/BOX	EPS/BOX
	Packing Weight		kg	3.7	3.7
External Dimension	Net Weight		kg	43.0	43.0
	Shipping Weight		kg	50.0	50.0
	Net Dimensions	Width	mm	530	530
		Height	mm	840	840
		Depth	mm	350	350
	Shipping Dimensions	Width	mm	602	602
		Height	mm	1,032	1,032
		Depth	mm	435	435

NOTE

- Specifications may be subject to change without prior notice.
- Select wire size based on the value of MCA

3. Indoor units

3-1. Specifications

Hydro Unit

Model Name		Indoor Unit		AE160DNYMPK/EU	AE160DNYMPK/EU
		Outdoor Unit		AE120BXYDEG/EU	AE140BXYDEG/EU
Mode			-	Heat Pump (A2W)	Heat Pump (A2W)
Power Supply			Φ, #, V, Hz	1, 2, 220-240, 50	1, 2, 220-240, 50
Power input	Cooling (Nominal)		kW	0.2	0.2
	Heating (Nominal)		kW	0.2	0.2
	Cooling (Max)		kW	0.2	0.2
	Heating (Max)		kW	4.2	4.2
Current Input	Cooling (Nominal)		A	0.9	0.9
	Heating (Nominal)		A	0.9	0.9
	Cooling (Max)		A	0.9	0.9
	Heating (Max)		A	18.3	18.3
Field Wiring	MCA		A	18.3	18.3
	MFA		A	22.9	22.9
Connections	Water Flow Rate (Std)	Heating	LPM	34.6	34.6
		Cooling	LPM	34.6	34.6
	Water Flow Rate	Min	LPM	7	7
		Max	LPM	58	58
	Water Pressure (Max)		bar	3.0	3.0
	Water pipe (To outdoor unit)	Type	-	BSPP Female 1 1/4	BSPP Female 1 1/4
		Inlet	Φ, mm	28	28
		Outlet	Φ, mm	28	28
	Water pipe (Space heating) (Zone 1)	Type	-	BSPP Female 1 1/4	BSPP Female 1 1/4
		Inlet	Φ, mm	28	28
		Outlet	Φ, mm	28	28
	Water pipe (Tank)	Type	-	BSPP Female 1 1/4	BSPP Female 1 1/4
		Inlet	Φ, mm	28	28
		Outlet	Φ, mm	28	28
	Leaving Water Temperature	Heating Min.	°C	15	15
		Heating Max.	°C	70	70
		Cooling Min.	°C	5	5
		Cooling Max.	°C	25	25
Water Pump	Type		-	BLDC Inv	BLDC Inv
	Motor Input		W	95	95
	Number of Unit		EA	1	1
	Max static pressure		mAq	9	9
Backup Heater	Power		kW	1Φ 2/4kW	1Φ 2/4kW
	Thermostat (Thermal Fuse)		°C	98 +0 -5	98 +0 -5
Safety device	Pressure relief valve		bar	2.9	2.9
	Flow Sensor		LPM	5~60	5~60
Expansion vessel	Internal water volume		liter	10	10
	Max. Working pressure		MPa	0.3	0.3
	Initial Charging pressure		MPa	0.12	0.12
Air Purge Valve			Φ, inch	BSPP male 3/8"	BSPP male 3/8"
Service Valve			Φ, inch	BSPP male 1 1/4	BSPP male 1 1/4

3. Indoor units

3-1. Specifications

Hydro Unit

Model Name		Indoor Unit		AE160DNYMPK/EU	AE160DNYMPK/EU
		Outdoor Unit		AE120BXYDEG/EU	AE140BXYDEG/EU
Sound Level	Sound Pressure Level	Heating	dB(A)	28	28
		Cooling	dB(A)	28	28
	Sound Power Level	Heating	dB(A)	42	42
Casing	Color		-	GREIGE	GREIGE
	Material		-	PCM	PCM
Packing	Material		-	EPS/BOX	EPS/BOX
	Packing Weight		kg	3.7	3.7
External Dimension	Net Weight		kg	43.0	43.0
	Shipping Weight		kg	50.0	50.0
	Net Dimensions	Width	mm	530	530
		Height	mm	840	840
		Depth	mm	350	350
	Shipping Dimensions	Width	mm	602	602
		Height	mm	1,032	1,032
		Depth	mm	435	435

NOTE

- Specifications may be subject to change without prior notice.
- Select wire size based on the value of MCA

3. Indoor units

3-1. Specifications

Hydro Unit

Model Name		Indoor Unit		AE160DNYMPK/EU	AE160DNYMPK/EU
		Outdoor Unit		AE080BXYDGG/EU	AE120BXYDGG/EU
Mode			-	Heat Pump (A2W)	Heat Pump (A2W)
Power Supply			Φ, #, V, Hz	3, 4, 380-415, 50	3, 4, 380-415, 50
Power input	Cooling (Nominal)		kW	3Φ - / 1Φ 0.2	3Φ - / 1Φ 0.2
	Heating (Nominal)		kW	3Φ - / 1Φ 0.2	3Φ - / 1Φ 0.2
	Cooling (Max)		kW	3Φ - / 1Φ 0.2	3Φ - / 1Φ 0.2
	Heating (Max)		kW	3Φ 6.0 / 1Φ 0.2	3Φ 6.0 / 1Φ 0.2
Current Input	Cooling (Nominal)		A	3Φ - / 1Φ 0.9	3Φ - / 1Φ 0.9
	Heating (Nominal)		A	3Φ - / 1Φ 0.9	3Φ - / 1Φ 0.9
	Cooling (Max)		A	3Φ - / 1Φ 0.9	3Φ - / 1Φ 0.9
	Heating (Max)		A	3Φ 8.7 / 1Φ 0.9	3Φ 8.7 / 1Φ 0.9
Field Wiring	MCA		A	3Φ 8.7 / 1Φ 0.9	3Φ 8.7 / 1Φ 0.9
	MFA		A	3Φ 10.9 / 1Φ 1.2	3Φ 10.9 / 1Φ 1.2
Connections	Water Flow Rate (Std)	Heating	LPM	23.1	34.6
		Cooling	LPM	23.1	34.6
	Water Flow Rate	Min	LPM	7	7
		Max	LPM	48	58
	Water Pressure (Max)		bar	3.0	3.0
	Water pipe (To outdoor unit)	Type	-	BSPP Female 1 1/4	BSPP Female 1 1/4
		Inlet	Φ, mm	28	28
		Outlet	Φ, mm	28	28
	Water pipe (Space heating) (Zone 1)	Type	-	BSPP Female 1 1/4	BSPP Female 1 1/4
		Inlet	Φ, mm	28	28
		Outlet	Φ, mm	28	28
	Water pipe (Tank)	Type	-	BSPP Female 1 1/4	BSPP Female 1 1/4
		Inlet	Φ, mm	28	28
		Outlet	Φ, mm	28	28
	Leaving Water Temperature	Heating Min.	°C	15	15
		Heating Max.	°C	70	70
		Cooling Min.	°C	5	5
		Cooling Max.	°C	25	25
Water Pump	Type		-	BLDC Inv	BLDC Inv
	Motor Input		W	95	95
	Number of Unit		EA	1	1
	Max static pressure		mAq	9	9
Backup Heater	Power		kW	3Φ 6kW	3Φ 6kW
	Thermostat (Thermal Fuse)		°C	98 +0 -5	98 +0 -5
Safety device	Pressure relief valve		bar	2.9	2.9
	Flow Sensor		LPM	5~60	5~60
Expansion vessel	Internal water volume		liter	10	10
	Max. Working pressure		MPa	0.3	0.3
	Initial Charging pressure		MPa	0.12	0.12
Air Purge Valve			Φ, inch	BSPP male 3/8"	BSPP male 3/8"
Service Valve			Φ, inch	BSPP male 1 1/4	BSPP male 1 1/4

3. Indoor units

3-1. Specifications

Hydro Unit

Model Name		Indoor Unit		AE160DNYMPK/EU	AE160DNYMPK/EU
		Outdoor Unit		AE080BXYDGG/EU	AE120BXYDGG/EU
Sound Level	Sound Pressure Level	Heating	dB(A)	26	28
		Cooling	dB(A)	26	28
	Sound Power Level	Heating	dB(A)	40	42
Casing	Color		-	GREIGE	GREIGE
	Material		-	PCM	PCM
Packing	Material		-	EPS/BOX	EPS/BOX
	Packing Weight		kg	3.7	3.7
External Dimension	Net Weight		kg	43.0	43.0
	Shipping Weight		kg	50.0	50.0
	Net Dimensions	Width	mm	530	530
		Height	mm	840	840
		Depth	mm	350	350
	Shipping Dimensions	Width	mm	602	602
		Height	mm	1,032	1,032
		Depth	mm	435	435

NOTE

- Specifications may be subject to change without prior notice.
- Select wire size based on the value of MCA

3. Indoor units

3-1. Specifications

Hydro Unit

Model Name		Indoor Unit		AE160DNYMPK/EU	AE160DNYMPK/EU
		Outdoor Unit		AE140BXYDGG/EU	AE050RXYDEG/EU
Mode			-	Heat Pump (A2W)	Heat Pump (A2W)
Power Supply			Φ, #, V, Hz	3, 4, 380-415, 50	1, 2, 220-240, 50
Power input	Cooling (Nominal)		kW	3Φ - / 1Φ 0.2	0.2
	Heating (Nominal)		kW	3Φ - / 1Φ 0.2	0.2
	Cooling (Max)		kW	3Φ - / 1Φ 0.2	0.2
	Heating (Max)		kW	3Φ 6.0 / 1Φ 0.2	4.2
Current Input	Cooling (Nominal)		A	3Φ - / 1Φ 0.9	0.9
	Heating (Nominal)		A	3Φ - / 1Φ 0.9	0.9
	Cooling (Max)		A	3Φ - / 1Φ 0.9	0.9
	Heating (Max)		A	3Φ 8.7 / 1Φ 0.9	18.3
Field Wiring	MCA		A	3Φ 8.7 / 1Φ 0.9	18.3
	MFA		A	3Φ 10.9 / 1Φ 1.2	22.9
Connections	Water Flow Rate (Std)	Heating	LPM	34.6	14.4
		Cooling	LPM	34.6	14.4
	Water Flow Rate	Min	LPM	7	7
		Max	LPM	58	48
	Water Pressure (Max)		bar	3.0	3.0
	Water pipe (To outdoor unit)	Type	-	BSPP Female 1 1/4	BSPP Female 1 1/4
		Inlet	Φ, mm	28	28
		Outlet	Φ, mm	28	28
	Water pipe (Space heating) (Zone 1)	Type	-	BSPP Female 1 1/4	BSPP Female 1 1/4
		Inlet	Φ, mm	28	28
		Outlet	Φ, mm	28	28
	Water pipe (Tank)	Type	-	BSPP Female 1 1/4	BSPP Female 1 1/4
		Inlet	Φ, mm	28	28
		Outlet	Φ, mm	28	28
	Leaving Water Temperature	Heating Min.	°C	15	15
		Heating Max.	°C	70	65
		Cooling Min.	°C	5	5
		Cooling Max.	°C	25	25
Water Pump	Type		-	BLDC Inv	BLDC Inv
	Motor Input		W	95	95
	Number of Unit		EA	1	1
	Max static pressure		mAq	9	9
Backup Heater	Power		kW	3Φ 6kW	1Φ 2/4kW
	Thermostat (Thermal Fuse)		°C	98 +0 -5	98 +0 -5
Safety device	Pressure relief valve		bar	2.9	2.9
	Flow Sensor		LPM	5~60	5~60
Expansion vessel	Internal water volume		liter	10	10
	Max. Working pressure		MPa	0.3	0.3
	Initial Charging pressure		MPa	0.12	0.12
Air Purge Valve			Φ, inch	BSPP male 3/8"	BSPP male 3/8"
Service Valve			Φ, inch	BSPP male 1 1/4	BSPP male 1 1/4

3. Indoor units

3-1. Specifications

Hydro Unit

Model Name		Indoor Unit		AE160DNYMPK/EU	AE160DNYMPK/EU
		Outdoor Unit		AE140BXYDGG/EU	AE050RXYDEG/EU
Sound Level	Sound Pressure Level	Heating	dB(A)	28	26
		Cooling	dB(A)	28	26
	Sound Power Level	Heating	dB(A)	42	40
Casing	Color		-	GREIGE	GREIGE
	Material		-	PCM	PCM
Packing	Material		-	EPS/BOX	EPS/BOX
	Packing Weight		kg	3.7	3.7
External Dimension	Net Weight		kg	43.0	43.0
	Shipping Weight		kg	50.0	50.0
	Net Dimensions	Width	mm	530	530
		Height	mm	840	840
		Depth	mm	350	350
	Shipping Dimensions	Width	mm	602	602
		Height	mm	1,032	1,032
		Depth	mm	435	435

NOTE

- Specifications may be subject to change without prior notice.
- Select wire size based on the value of MCA

3. Indoor units

3-1. Specifications

Hydro Unit

Model Name		Indoor Unit		AE160DNYMPK/EU	AE160DNYMPK/EU
		Outdoor Unit		AE080RXYDEG/EU	AE120RXYDEG/EU
Mode			-	Heat Pump (A2W)	Heat Pump (A2W)
Power Supply			Φ, #, V, Hz	1, 2, 220-240, 50	1, 2, 220-240, 50
Power input	Cooling (Nominal)		kW	0.2	0.2
	Heating (Nominal)		kW	0.2	0.2
	Cooling (Max)		kW	0.2	0.2
	Heating (Max)		kW	4.2	4.2
Current Input	Cooling (Nominal)		A	0.9	0.9
	Heating (Nominal)		A	0.9	0.9
	Cooling (Max)		A	0.9	0.9
	Heating (Max)		A	18.3	18.3
Field Wiring	MCA		A	18.3	18.3
	MFA		A	22.9	22.9
Connections	Water Flow Rate (Std)	Heating	LPM	23.1	34.6
		Cooling	LPM	21.6	34.6
	Water Flow Rate	Min	LPM	7	12
		Max	LPM	48	58
	Water Pressure (Max)		bar	3.0	3.0
	Water pipe (To outdoor unit)	Type	-	BSPP Female 1 1/4	BSPP Female 1 1/4
		Inlet	Φ, mm	28	28
		Outlet	Φ, mm	28	28
	Water pipe (Space heating) (Zone 1)	Type	-	BSPP Female 1 1/4	BSPP Female 1 1/4
		Inlet	Φ, mm	28	28
		Outlet	Φ, mm	28	28
	Water pipe (Tank)	Type	-	BSPP Female 1 1/4	BSPP Female 1 1/4
		Inlet	Φ, mm	28	28
		Outlet	Φ, mm	28	28
	Leaving Water Temperature	Heating Min.	°C	15	15
		Heating Max.	°C	65	65
		Cooling Min.	°C	5	5
		Cooling Max.	°C	25	25
Water Pump	Type		-	BLDC Inv	BLDC Inv
	Motor Input		W	95	95
	Number of Unit		EA	1	1
	Max static pressure		mAq	9	9
Backup Heater	Power		kW	1Φ 2/4kW	1Φ 2/4kW
	Thermostat (Thermal Fuse)		°C	98 +0 -5	98 +0 -5
Safety device	Pressure relief valve		bar	2.9	2.9
	Flow Sensor		LPM	5~60	5~60
Expansion vessel	Internal water volume		liter	10	10
	Max. Working pressure		MPa	0.3	0.3
	Initial Charging pressure		MPa	0.12	0.12
Air Purge Valve			Φ, inch	BSPP male 3/8"	BSPP male 3/8"
Service Valve			Φ, inch	BSPP male 1 1/4	BSPP male 1 1/4

3. Indoor units

3-1. Specifications

Hydro Unit

Model Name		Indoor Unit		AE160DNYMPK/EU	AE160DNYMPK/EU
		Outdoor Unit		AE080RXYDEG/EU	AE120RXYDEG/EU
Sound Level	Sound Pressure Level	Heating	dB(A)	26	28
		Cooling	dB(A)	26	28
	Sound Power Level	Heating	dB(A)	40	42
Casing	Color		-	GREIGE	GREIGE
	Material		-	PCM	PCM
Packing	Material		-	EPS/BOX	EPS/BOX
	Packing Weight		kg	3.7	3.7
External Dimension	Net Weight		kg	43.0	43.0
	Shipping Weight		kg	50.0	50.0
	Net Dimensions	Width	mm	530	530
		Height	mm	840	840
		Depth	mm	350	350
	Shipping Dimensions	Width	mm	602	602
		Height	mm	1,032	1,032
		Depth	mm	435	435

NOTE

- Specifications may be subject to change without prior notice.
- Select wire size based on the value of MCA

3. Indoor units

3-1. Specifications

Hydro Unit

Model Name		Indoor Unit		AE160DNYMPK/EU	AE160DNYMPK/EU
		Outdoor Unit		AE160RXYDEG/EU	AE080RXYDGG/EU
Mode			-	Heat Pump (A2W)	Heat Pump (A2W)
Power Supply			Φ, #, V, Hz	1, 2, 220-240, 50	3, 4, 380-415, 50
Power input	Cooling (Nominal)		kW	0.2	3Φ - / 1Φ 0.2
	Heating (Nominal)		kW	0.2	3Φ - / 1Φ 0.2
	Cooling (Max)		kW	0.2	3Φ - / 1Φ 0.2
	Heating (Max)		kW	4.2	3Φ 6.0 / 1Φ 0.2
Current Input	Cooling (Nominal)		A	0.9	3Φ - / 1Φ 0.9
	Heating (Nominal)		A	0.9	3Φ - / 1Φ 0.9
	Cooling (Max)		A	0.9	3Φ - / 1Φ 0.9
	Heating (Max)		A	18.3	3Φ 8.7 / 1Φ 0.9
Field Wiring	MCA		A	18.3	3Φ 8.7 / 1Φ 0.9
	MFA		A	22.9	3Φ 10.9 / 1Φ 1.2
Connections	Water Flow Rate (Std)	Heating	LPM	46.2	23.1
		Cooling	LPM	40.4	21.6
	Water Flow Rate	Min	LPM	12	7
		Max	LPM	58	48
	Water Pressure (Max)		bar	3.0	3.0
	Water pipe (To outdoor unit)	Type	-	BSPP Female 1 1/4	BSPP Female 1 1/4
		Inlet	Φ, mm	28	28
		Outlet	Φ, mm	28	28
	Water pipe (Space heating) (Zone 1)	Type	-	BSPP Female 1 1/4	BSPP Female 1 1/4
		Inlet	Φ, mm	28	28
		Outlet	Φ, mm	28	28
	Water pipe (Tank)	Type	-	BSPP Female 1 1/4	BSPP Female 1 1/4
		Inlet	Φ, mm	28	28
		Outlet	Φ, mm	28	28
	Leaving Water Temperature	Heating Min.	°C	15	15
		Heating Max.	°C	65	65
		Cooling Min.	°C	5	5
		Cooling Max.	°C	25	25
Water Pump	Type		-	BLDC Inv	BLDC Inv
	Motor Input		W	95	95
	Number of Unit		EA	1	1
	Max static pressure		mAq	9	9
Backup Heater	Power		kW	1Φ 2/4kW	3Φ 6kW
	Thermostat (Thermal Fuse)		°C	98 +0 -5	98 +0 -5
Safety device	Pressure relief valve		bar	2.9	2.9
	Flow Sensor		LPM	5~60	5~60
Expansion vessel	Internal water volume		liter	10	10
	Max. Working pressure		MPa	0.3	0.3
	Initial Charging pressure		MPa	0.12	0.12
Air Purge Valve			Φ, inch	BSPP male 3/8"	BSPP male 3/8"
Service Valve			Φ, inch	BSPP male 1 1/4	BSPP male 1 1/4

3. Indoor units

3-1. Specifications

Hydro Unit

Model Name		Indoor Unit		AE160DNYMPK/EU	AE160DNYMPK/EU
		Outdoor Unit		AE160RXYDEG/EU	AE080RXYDGG/EU
Sound Level	Sound Pressure Level	Heating	dB(A)	28	26
		Cooling	dB(A)	28	26
	Sound Power Level	Heating	dB(A)	42	40
Casing	Color		-	GREIGE	GREIGE
	Material		-	PCM	PCM
Packing	Material		-	EPS/BOX	EPS/BOX
	Packing Weight		kg	3.7	3.7
External Dimension	Net Weight		kg	43.0	43.0
	Shipping Weight		kg	50.0	50.0
	Net Dimensions	Width	mm	530	530
		Height	mm	840	840
		Depth	mm	350	350
	Shipping Dimensions	Width	mm	602	602
		Height	mm	1,032	1,032
		Depth	mm	435	435

NOTE

- Specifications may be subject to change without prior notice.
- Select wire size based on the value of MCA

3. Indoor units

3-1. Specifications

Hydro Unit

Model Name		Indoor Unit		AE160DNYMPK/EU	AE160DNYMPK/EU
		Outdoor Unit		AE120RXYDGG/EU	AE160RXYDGG/EU
Mode			-	Heat Pump (A2W)	Heat Pump (A2W)
Power Supply			Φ, #, V, Hz	3, 4, 380-415, 50	3, 4, 380-415, 50
Power input	Cooling (Nominal)		kW	3Φ - / 1Φ 0.2	3Φ - / 1Φ 0.2
	Heating (Nominal)		kW	3Φ - / 1Φ 0.2	3Φ - / 1Φ 0.2
	Cooling (Max)		kW	3Φ - / 1Φ 0.2	3Φ - / 1Φ 0.2
	Heating (Max)		kW	3Φ 6.0 / 1Φ 0.2	3Φ 6.0 / 1Φ 0.2
Current Input	Cooling (Nominal)		A	3Φ - / 1Φ 0.9	3Φ - / 1Φ 0.9
	Heating (Nominal)		A	3Φ - / 1Φ 0.9	3Φ - / 1Φ 0.9
	Cooling (Max)		A	3Φ - / 1Φ 0.9	3Φ - / 1Φ 0.9
	Heating (Max)		A	3Φ 8.7 / 1Φ 0.9	3Φ 8.7 / 1Φ 0.9
Field Wiring	MCA		A	3Φ 8.7 / 1Φ 0.9	3Φ 8.7 / 1Φ 0.9
	MFA		A	3Φ 10.9 / 1Φ 1.2	3Φ 10.9 / 1Φ 1.2
Connections	Water Flow Rate (Std)	Heating	LPM	34.6	46.2
		Cooling	LPM	34.6	40.4
	Water Flow Rate	Min	LPM	12	12
		Max	LPM	58	58
	Water Pressure (Max)		bar	3.0	3.0
	Water pipe (To outdoor unit)	Type	-	BSPP Female 1 1/4	BSPP Female 1 1/4
		Inlet	Φ, mm	28	28
		Outlet	Φ, mm	28	28
	Water pipe (Space heating) (Zone 1)	Type	-	BSPP Female 1 1/4	BSPP Female 1 1/4
		Inlet	Φ, mm	28	28
		Outlet	Φ, mm	28	28
	Water pipe (Tank)	Type	-	BSPP Female 1 1/4	BSPP Female 1 1/4
		Inlet	Φ, mm	28	28
		Outlet	Φ, mm	28	28
	Leaving Water Temperature	Heating Min.	°C	15	15
		Heating Max.	°C	65	65
		Cooling Min.	°C	5	5
		Cooling Max.	°C	25	25
Water Pump	Type		-	BLDC Inv	BLDC Inv
	Motor Input		W	95	95
	Number of Unit		EA	1	1
	Max static pressure		mAq	9	9
Backup Heater	Power		kW	3Φ 6kW	3Φ 6kW
	Thermostat (Thermal Fuse)		°C	98 +0 -5	98 +0 -5
Safety device	Pressure relief valve		bar	2.9	2.9
	Flow Sensor		LPM	5~60	5~60
Expansion vessel	Internal water volume		liter	10	10
	Max. Working pressure		MPa	0.3	0.3
	Initial Charging pressure		MPa	0.12	0.12
Air Purge Valve			Φ, inch	BSPP male 3/8"	BSPP male 3/8"
Service Valve			Φ, inch	BSPP male 1 1/4	BSPP male 1 1/4

3. Indoor units

3-1. Specifications

Hydro Unit

Model Name		Indoor Unit		AE160DNYMPK/EU	AE160DNYMPK/EU
		Outdoor Unit		AE120RXYDGG/EU	AE160RXYDGG/EU
Sound Level	Sound Pressure Level	Heating	dB(A)	28	28
		Cooling	dB(A)	28	28
	Sound Power Level	Heating	dB(A)	42	42
Casing	Color		-	GREIGE	GREIGE
	Material		-	PCM	PCM
Packing	Material		-	EPS/BOX	EPS/BOX
	Packing Weight		kg	3.7	3.7
External Dimension	Net Weight		kg	43.0	43.0
	Shipping Weight		kg	50.0	50.0
	Net Dimensions	Width	mm	530	530
		Height	mm	840	840
		Depth	mm	350	350
	Shipping Dimensions	Width	mm	602	602
		Height	mm	1,032	1,032
		Depth	mm	435	435

NOTE

- Specifications may be subject to change without prior notice.
- Select wire size based on the value of MCA

3. Indoor units

3-2. Dimensional drawing

AE200DNWMPK/EU

Unit : mm

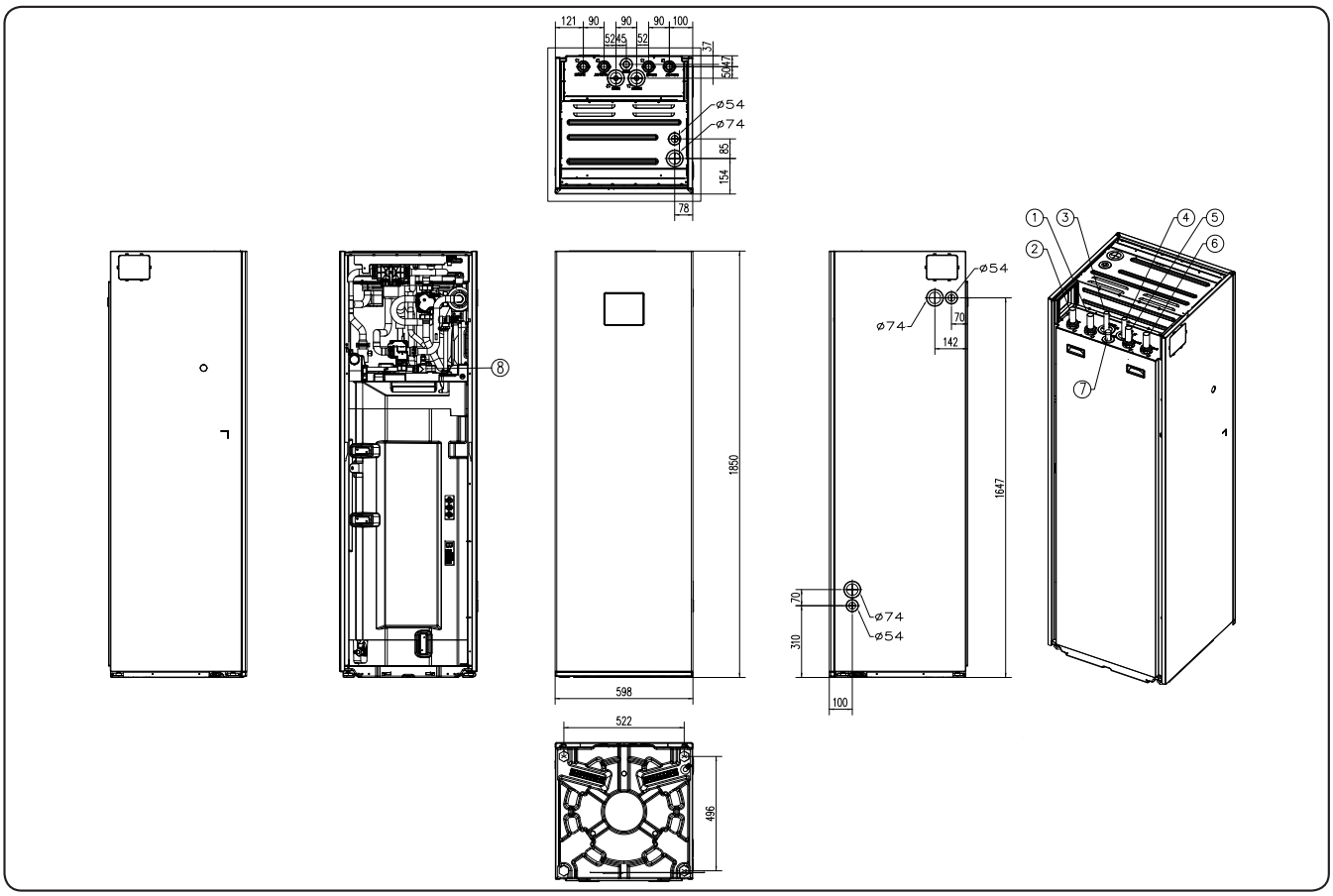

NO	Name	Description
01	Outdoor inlet (From Outdoor Unit)	ø28, Straight pipe
02	Outdoor outlet (To Outdoor Unit)	ø28, Straight pipe
03	DHW outlet (Hot Water)	ø22, Straight pipe
04	DHW inlet (Cold Water)	ø22, Straight pipe
05	Heating Outlet (To Zone)	ø28, Straight pipe
06	Heating inlet (From Zone)	ø28, Straight pipe
07	DHW Return (Recirculation)	ø22, Straight pipe
08	T/P Valve	10bar, 90 °C

3. Indoor units

3-2. Dimensional drawing

AE200DNXMPK/EU

Unit : mm

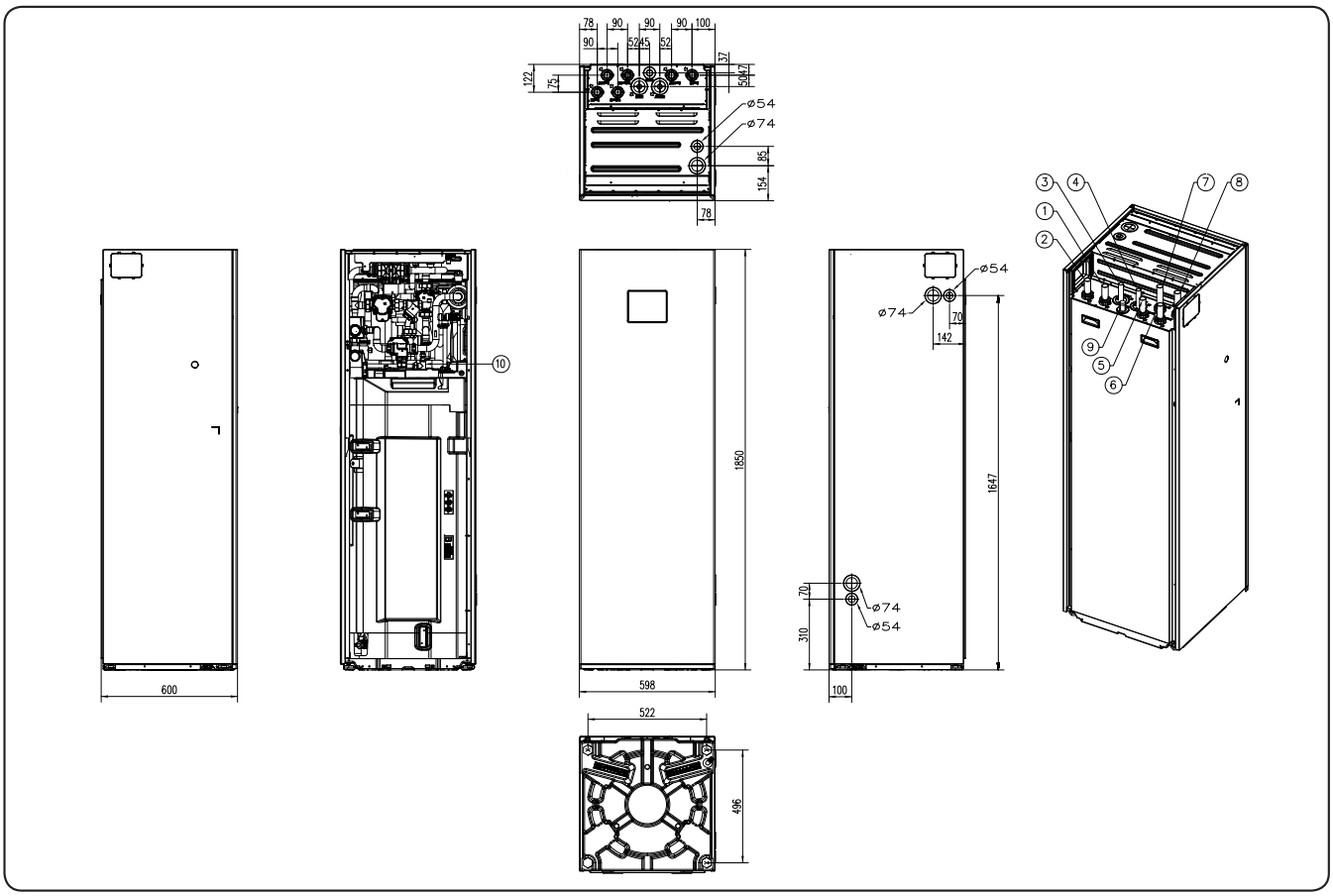

NO	Name	Description
01	Heating Outlet (Zone 1) (To Zone 1)	ø28, Straight pipe
02	Heating inlet (Zone 1) (From Zone 1)	ø28, Straight pipe
03	DHW outlet (Hot Water)	ø22, Straight pipe
04	DHW inlet (Cold Water)	ø22, Straight pipe
05	Outdoor outlet (To Outdoor Unit)	ø28, Straight pipe
06	Heating Outlet (Zone 2) (To Zone 2)	ø28, Straight pipe
07	Outdoor inlet (From Outdoor Unit)	ø28, Straight pipe
08	Heating inlet (Zone 2) (From Zone 2)	ø28, Straight pipe
09	DHW Return (Recirculation)	ø22, Straight pipe
10	T/P Valve	10bar, 90 °C

3. Indoor units

3-2. Dimensional drawing

AE160DNYMPK/EU

Unit : mm

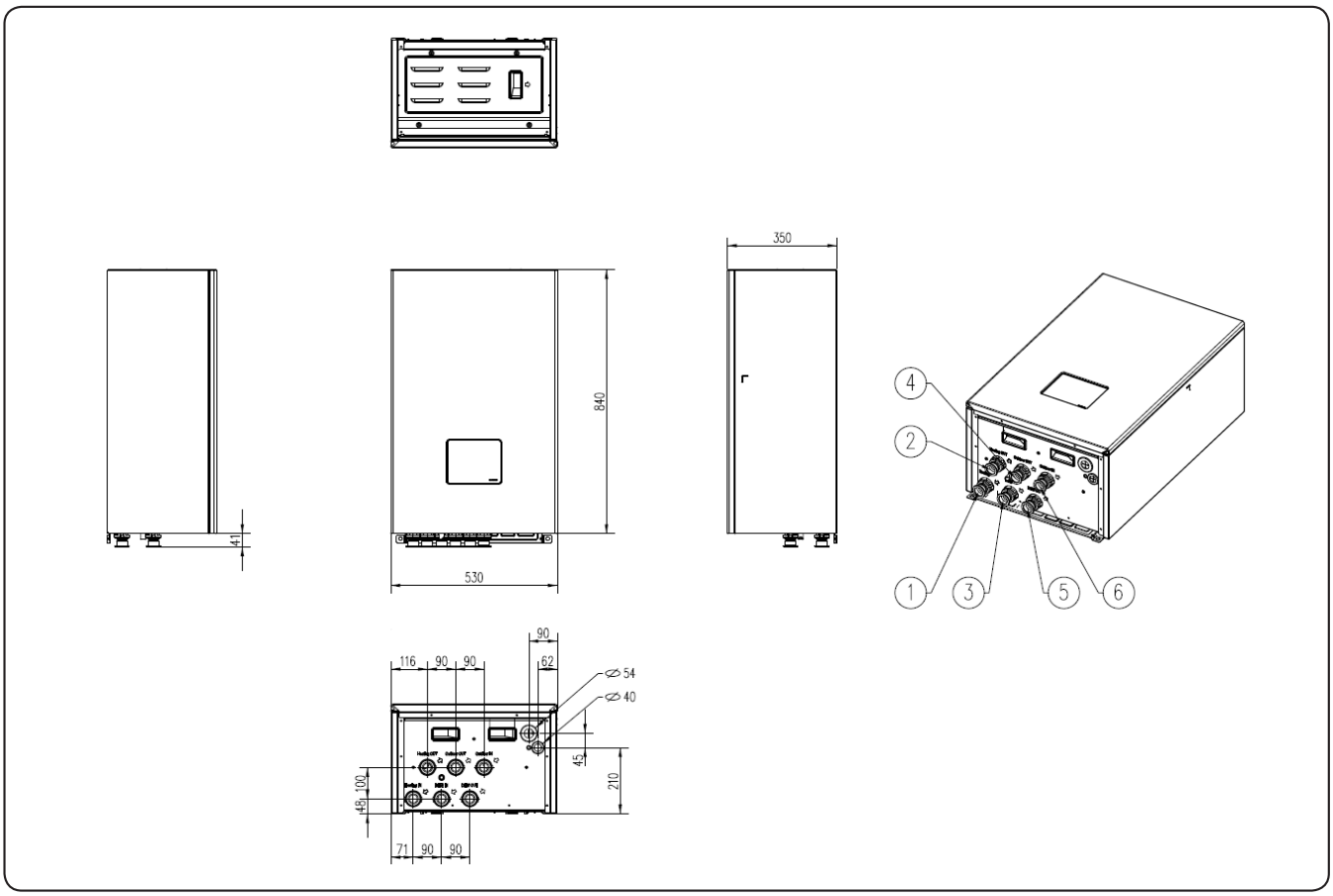

NO	Name	Description
01	Heating inlet (From zone)	BSPP female, 1-1/4"
02	Heating outlet (To zone)	BSPP female, 1-1/4"
03	DHW inlet (Cold water)	BSPP female, 1-1/4"
04	Outdoor outlet (To outdoor unit)	BSPP female, 1-1/4"
05	DHW outlet (Hot water)	BSPP female, 1-1/4"
06	Outdoor inlet (From outdoor unit)	BSPP female, 1-1/4"

3. Indoor units

3-2. Dimensional drawing

AE160DNZMPK/EU

Unit : mm

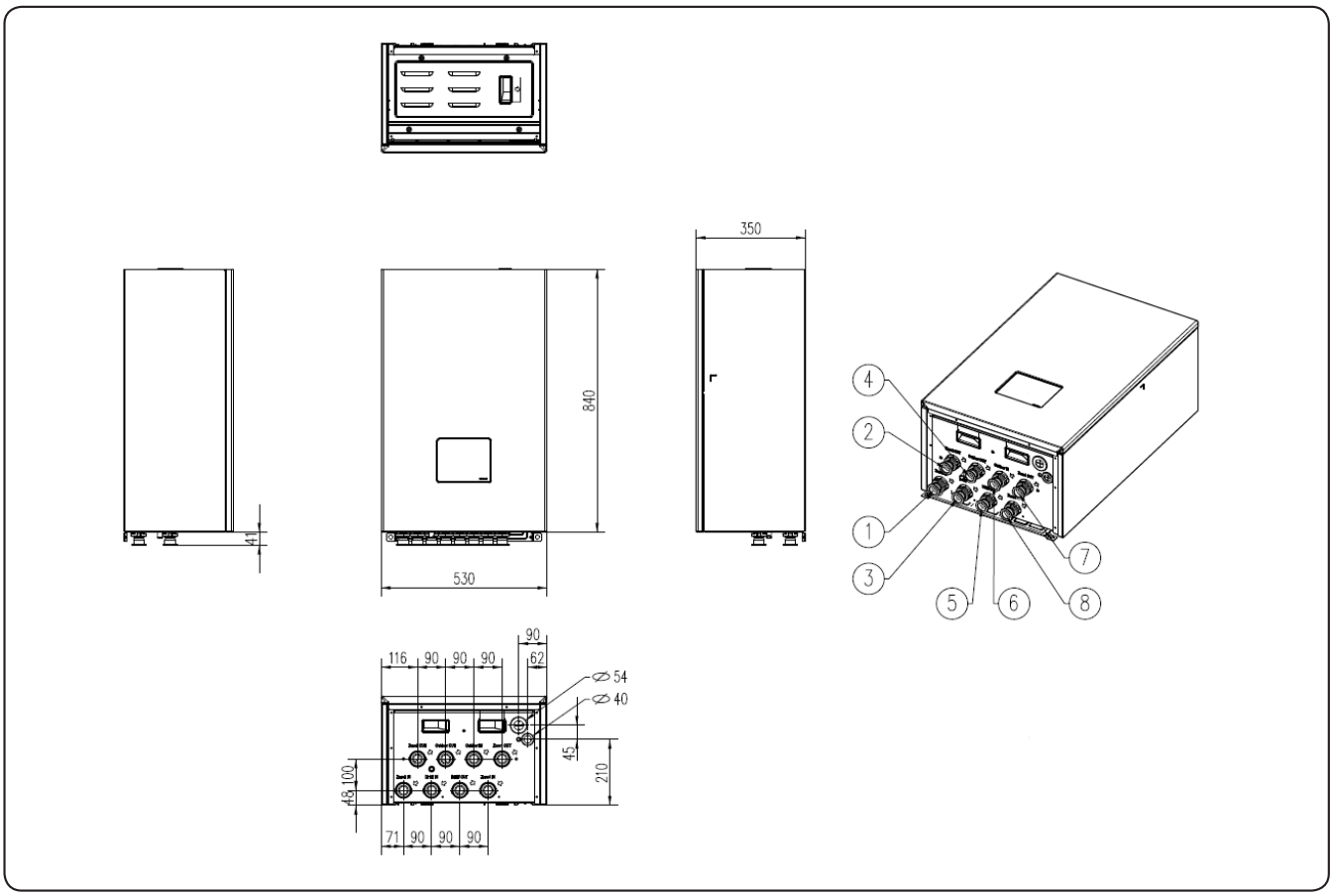

NO	Name	Description
01	Heating inlet(Zone 2) (From zone 2)	BSPP female, 1-1/4"
02	Heating outlet(Zone 2) (To zone 2)	BSPP female, 1-1/4"
03	DHW inlet (Cold water)	BSPP female, 1-1/4"
04	Outdoor outlet (To outdoor unit)	BSPP female, 1-1/4"
05	DHW outlet (Hot water)	BSPP female, 1-1/4"
06	Outdoor inlet (From outdoor unit)	BSPP female, 1-1/4"
07	Heating outlet(Zone 1) (To zone 1)	BSPP female, 1-1/4"
08	Heating inlet(Zone 1) (From zone 1)	BSPP female, 1-1/4"

3. Indoor units

3-2. Dimensional drawing

ClimateHub

Main components

❋ AE200DNWMPK

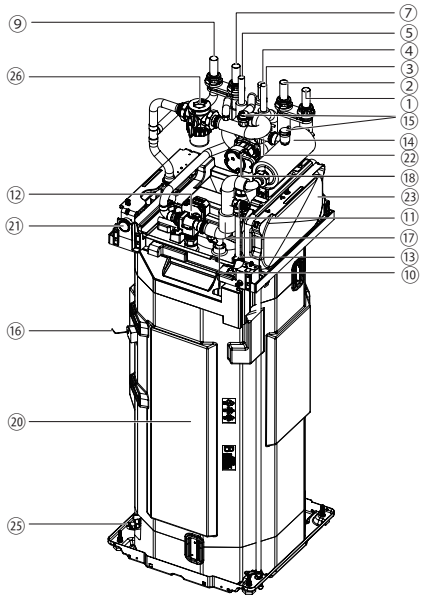

❋ AE200DNXMPK

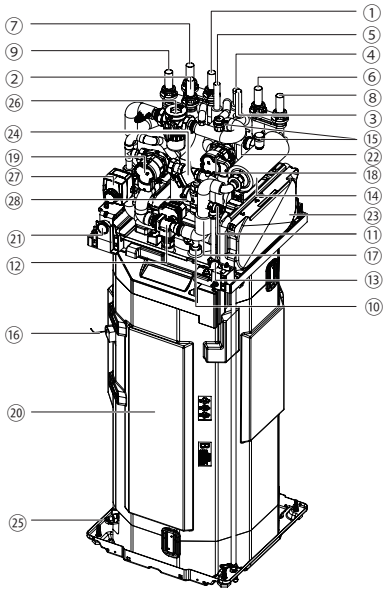

No.	Part name	Note
①	Outdoor outlet	ø28, Straight pipe
②	Outdoor inlet	ø28, Straight pipe
③	DHW outlet	ø22, Straight pipe
④	DHW return	Φ22, Straight pipe
⑤	DHW inlet	ø22, Straight pipe
⑥	Heating outlet (Zone 1)	ø28, Straight pipe
⑦	Heating outlet (Zone 2)	ø28, Straight pipe
⑧	Heating inlet (Zone 1)	ø28, Straight pipe
⑨	Heating inlet (Zone 2)	ø28, Straight pipe
⑩	T/P valve	10bar, 90 °C
⑪	Pressure relief valve	3bar, BSPP 1/2"
⑫	3way valve	
⑬	Anode bar	BSPP 1"
⑭	Back-up heater	
⑮	Air vent	BSPP 3/8"

No.	Part name	Note
⑯	Tank thermistor	
⑰	Heater thermistor	
⑱	Water Pump (Zone 2)	
⑲	Water pump (Zone 1)	
⑳	Water tank	200L
㉑	Manometer	0~4bar
㉒	Flow sensor	
㉓	Expansion vessel	10L, Pre-charge gas: 1.2 bar 90 °C, N2, BSPP 3/8"
㉔	Strainer	
㉕	Tank drain valve	
㉖	Magnetic filter	
㉗	Mixing valve	
㉘	Check valve	

3. Indoor units

3-2. Dimensional drawing

Hydro Unit

Main components

✻ AE160DNYMPK

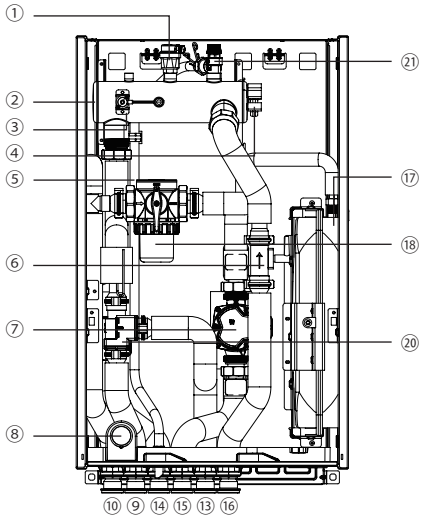

✻ AE160DNZMPK

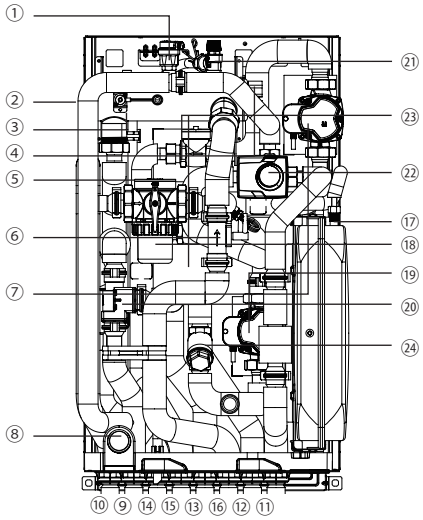

No.	Name	Note
①	Air vent 3/8″	BSPP male 3/8″
②	Backup heater thermal fuse	Thermal cut out 98 °C (+0,-5 °C)
③	Backup heater thermostat	Disc. 65 °C ±4 °C
④	Backup heater element	2, 4 kW: 1Φ AC 230V 50Hz / 6 kW: 3Φ AC 400V 50Hz
⑤	Drain hose	
⑥	Flow sensor	5~80L/min
⑦	Water pump	1P-230 V-50 Hz, 46 LPM x 54 kPa
⑧	Manometer	ø48, 0~4bar
⑨	Heating outlet(To zone) for AE160DNYMPK Heating outlet(Zone 2) (To zone 2) for AE160DNZMPK	BSPP female, 1-1/4"
⑩	Heating inlet(From zone) for AE160DNYMPK Heating inlet(Zone 2) (From zone 2) for AE160DNZMPK	BSPP female, 1-1/4"
⑪	Heating outlet(Zone 1) (To zone 1) for AE160DNZMPK	BSPP female, 1-1/4"
⑫	Heating inlet(Zone 1) (From zone 1) for AE160DNZMPK	BSPP female, 1-1/4"
⑬	DHW outlet (Hot water)	BSPP female, 1-1/4"
⑭	DHW inlet (Cold water)	BSPP female, 1-1/4"
⑮	Outdoor outlet (To outdoor unit)	BSPP female, 1-1/4"
⑯	Outdoor inlet (From outdoor unit)	BSPP female, 1-1/4"
⑰	Expansion vessel	10L, Pre-charge gas: 1.2 bar 90 °C, N_2, BSPP 3/8"
⑱	Magnetic filter	
⑲	Water pump (Zone 1)	
⑳	3way valve	
㉑	Pressure relief valve	2.9 bar, BSPP 1/2″
㉒	Mixing valve	
㉓	Check valve	
㉔	Strainer	

3. Indoor units

3-3. Center of Gravity

ClimateHub

Units : mm [inches]

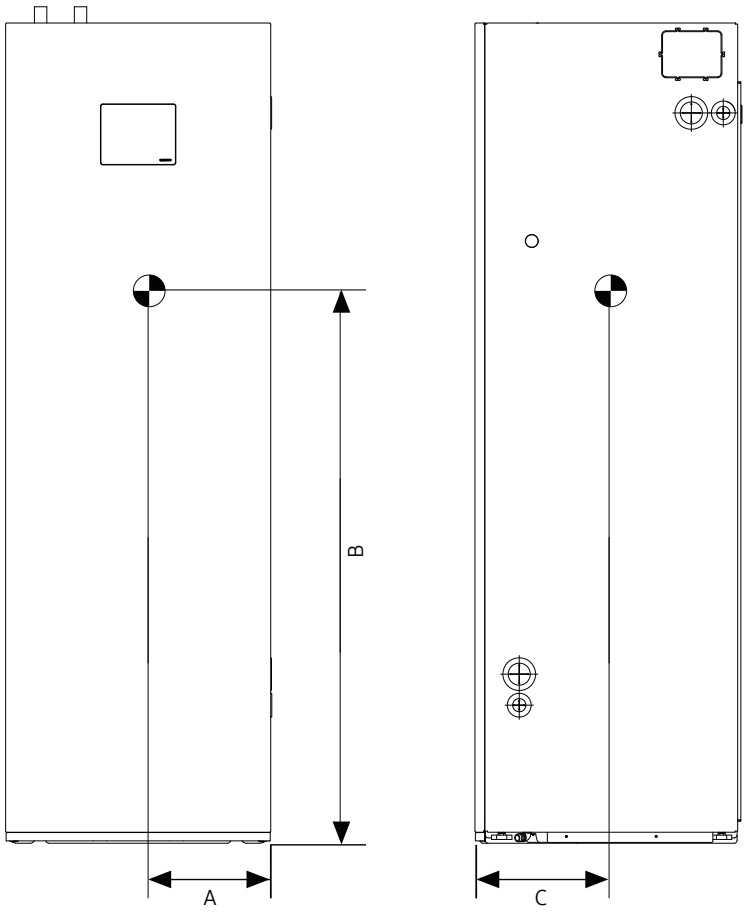

Model	A	B	C
AE200DN*MPK/EU	268 [10-9/16]	1,210 [47-5/8]	367 [14-7/16]

3. Indoor units

3-3. Center of Gravity

Hydro Unit

Units : mm [inches]

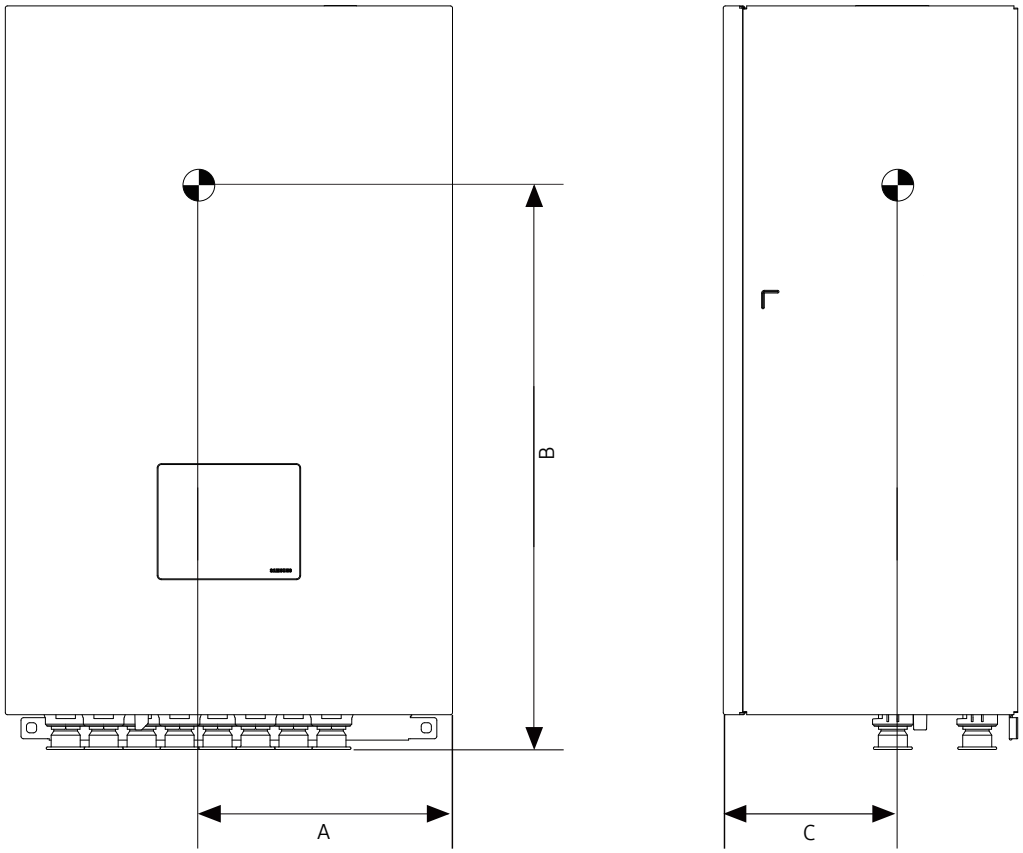

Model	A	B	C
AE160DN*MPK/EU	339 [13-3/8]	605 [23-13/16]	130 [5-1/8]

3. Indoor units

3-4. Electrical wiring diagram

ClimateHub/Hydro Unit

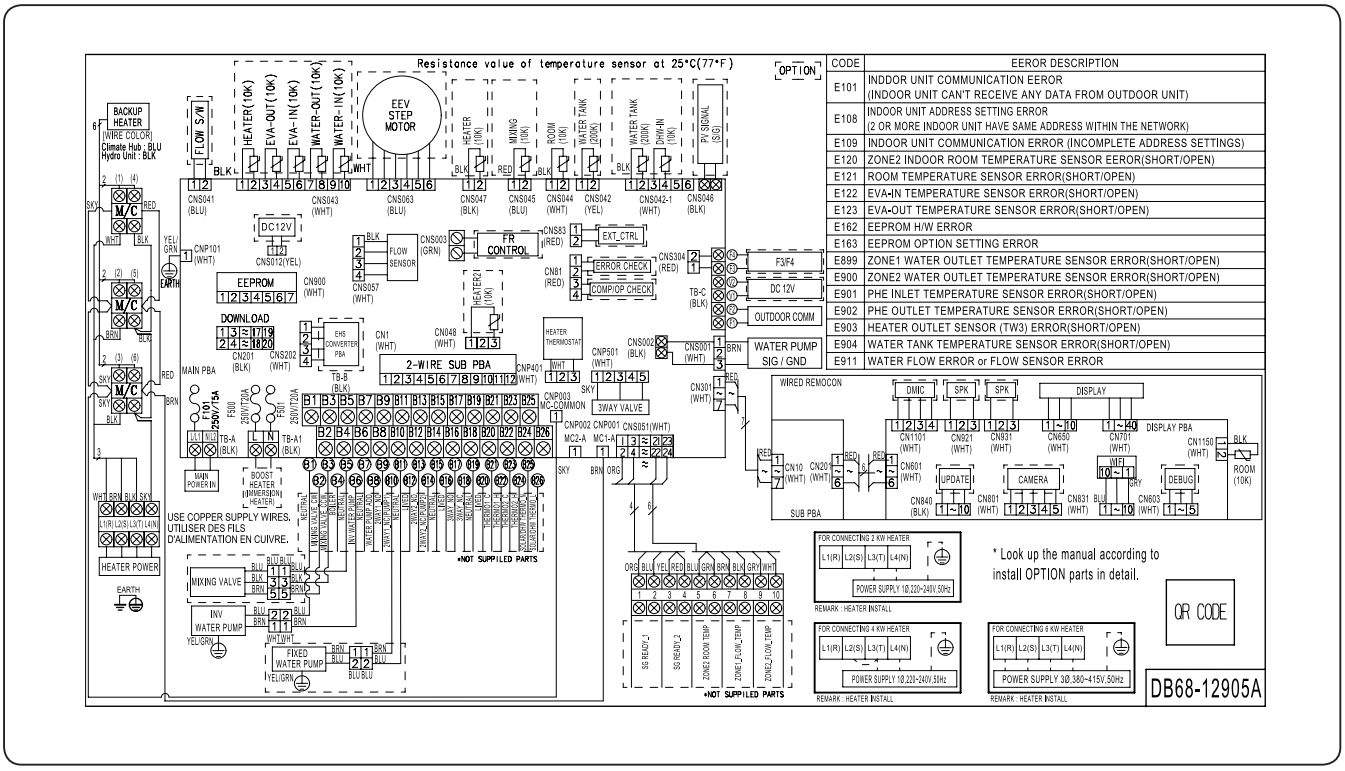

MAIN PBA	Printed Circuit Board(MAIN)	PV SIGNAL (S/G)	Photo Voltaic Signal
SUB PBA	Printed circuit board(SUB)	HEATER(10K)	Thermistor (Heater_10Kohm)
M/C	Magnetic Contactor	EVA-OUT(10K)	Thermistor (Eva out_10Kohm)
MIXING VALVE_CW	Mixing Valve_Clockwise	EVA-IN(10K)	Thermistor (Eva in_10Kohm)
MIXING VALVE_CCW	Mixing Valve_Counterclockwise	WATER-OUT(10K)	Thermistor (Water-Out_10Kohm)
INV WATER PUMP	Inverter Water Pump	WATER-IN(10K)	Thermistor (Water-In_10Kohm)
2WAY1_NO	2way Valve1_Normal Open	MIXING(10K)	Thermistor (Mixing_10Kohm)
2WAY1_NC	2way Valve1_Normal Close	ROOM(10K)	Thermistor (Room_10Kohm)
2WAY2_NO	2way Valve2_Normal Open	WATER TANK(200K)	Thermistor (Water Tank_200Kohm)
2WAY2_NC	2way Valve2_Normal Close	DHW-IN(10K)	Thermistor (Domestic Hot Water_10Kohm)
3WAY_NO	3way Valve_Normal Open	EEV STEP MOTOR	Electronic Expansion Valve Step Motor
3WAY_NC	3way Valve_Normal Close	FLOW S/W	Flow Switch
THERMO1_C	Thermostat1_Cooling	SG READY	Smartgrid Ready
THERMO1_H	Thermostat1_Heating	ZONE1_FLOW_TEMP	Zone1_Flow_Temperature
THERMO2_C	Thermostat2_Cooling	ZONE2_FLOW_TEMP	Zone2_Flow_Temperature
THERMO2_H	Thermostat2_Heating	ZONE2 ROOM TEMP	Zone2_Room_Temperature
WATER PUMP SIG / GND	Water Pump Signal / Ground	SOLAR/DHW THERMO_N	Solar/Domestic Hot Water Thermostat_Neutral
OUTDOOR COMM	Outdoor Communication	SOLAR/DHW THERMO_L	Solar/Domestic Hot Water Thermostat_Live
COMP/OP CHECK	Compressor/Operation Check	DMIC	Digital Microphone
EXT_CTRL	External Control	SPK	Speaker

NOTES

1. This wiring diagram applies only to the Indoor unit.
2. Symbols show as follow :
   blk: black, red: red, blu: blue, wht: white, yel: yellow, brn: brown, sky: skyblue, grn: green
3. For connection wiring indoor-outdoor transmission F1-F2, indoor-wired remote controller transmission F3-F4.
4. ⏚ Protective earth(SCREW)

3. Indoor units

3-5. Sound data

Indoor Unit	Model		Sound Pressure dB(A) (Heating)	Sound Power dB(A) (Heating)
Climate Hub	AE050*XYD**/EU	AE200DNXMPK/EU	28	42
	AE080*XYD**/EU	AE200DNXMPK/EU	28	42
	AE120*XYD**/EU	AE200DNXMPK/EU	30	44
	AE140*XYD**/EU	AE200DNXMPK/EU	30	44
	AE160*XYD**/EU	AE200DNXMPK/EU	30	44
	AE050*XYD**/EU	AE200DNWMPK/EU	26	40
	AE080*XYD**/EU	AE200DNWMPK/EU	26	40
	AE120*XYD**/EU	AE200DNWMPK/EU	28	42
	AE140*XYD**/EU	AE200DNWMPK/EU	28	42
	AE160*XYD**/EU	AE200DNWMPK/EU	28	42
Hydro Unit	AE050*XYD**/EU	AE160DNZMPK/EU	28	42
	AE080*XYD**/EU	AE160DNZMPK/EU	28	42
	AE120*XYD**/EU	AE160DNZMPK/EU	30	44
	AE140*XYD**/EU	AE160DNZMPK/EU	30	44
	AE160*XYD**/EU	AE160DNZMPK/EU	30	44
	AE050*XYD**/EU	AE160DNYMPK/EU	26	40
	AE080*XYD**/EU	AE160DNYMPK/EU	26	40
	AE120*XYD**/EU	AE160DNYMPK/EU	28	42
	AE140*XYD**/EU	AE160DNYMPK/EU	28	42
	AE160*XYD**/EU	AE160DNYMPK/EU	28	42

NOTE

- Specifications may be subject to change without prior notice.
- Sound Pressure Level
  - Sound pressure level is obtained in an anechoic room.
  - Sound pressure level is a relative value, depending on the distance and acoustic environment.
  - Sound pressure level may differ depending on operation condition.
  - dBA = A-weighted sound pressure level
  - Reference acoustic pressure 0 dB = 20μPa
- Sound Power Level
  - Sound power level is an absolute value that a sound source generates.
  - dBA = A-weighted sound power level.
  - Reference power : 1pW.
  - Measured according to ISO 3741.

3. Indoor units

3-5. Sound data

Sound Pressure level

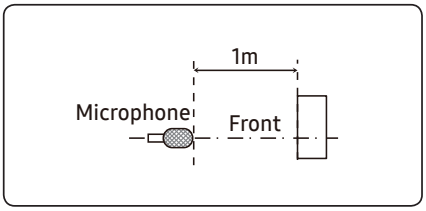

Unit: dB(A)

Model	Heating
AE050*XYD**/EU + AE200DNXMPK/EU	28
AE080*XYD**/EU + AE200DNXMPK/EU	28
AE120*XYD**/EU + AE200DNXMPK/EU	30
AE140*XYD**/EU + AE200DNXMPK/EU	30

- NR Curve

1) AE050*XYD**/EU + AE200DNXMPK/EU

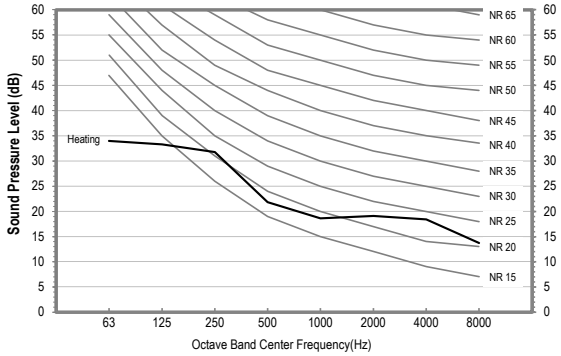

2) AE080*XYD**/EU + AE200DNXMPK/EU

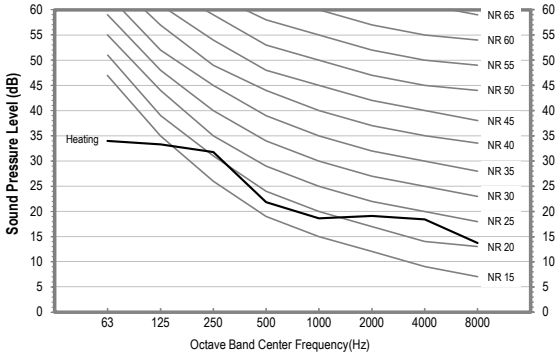

3) AE120*XYD**/EU + AE200DNXMPK/EU

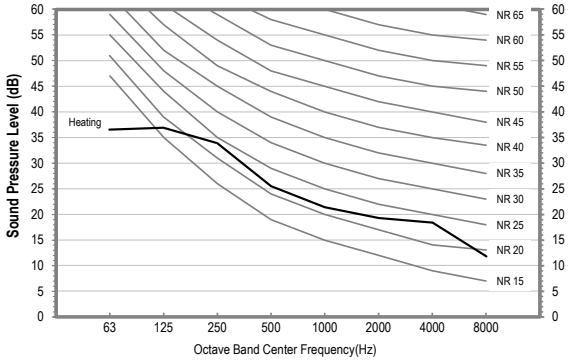

4) AE140*XYD**/EU + AE200DNXMPK/EU

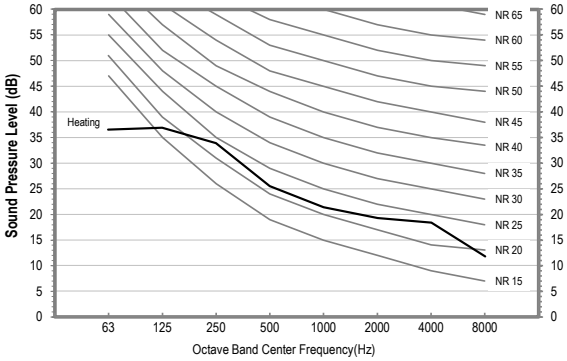

NOTE

- Specifications may be subject to change without prior notice.
- Sound Pressure Level
  - Sound pressure level is obtained in an anechoic room.
  - Sound pressure level is a relative value, depending on the distance and acoustic environment.
  - Sound pressure level may differ depending on operation condition.
  - dBA = A weighted sound pressure level
  - Reference acoustic pressure 0 dB = 20μPa

3. Indoor units

3-5. Sound data

Sound Pressure level

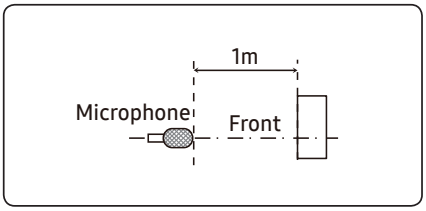

Unit: dB(A)

Model	Heating
AE160*XYD**/EU + AE200DNXMPK/EU	30
AE050*XYD**/EU + AE200DNWMPK/EU	26
AE080*XYD**/EU + AE200DNWMPK/EU	26
AE120*XYD**/EU + AE200DNWMPK/EU	28

- NR Curve

1) AE160*XYD**/EU + AE200DNXMPK/EU

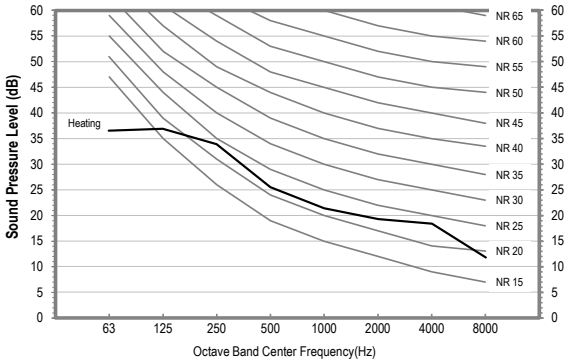

2) AE050*XYD**/EU + AE200DNWMPK/EU

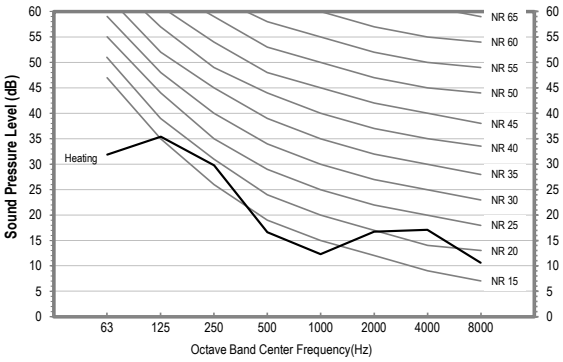

3) AE080*XYD**/EU + AE200DNWMPK/EU

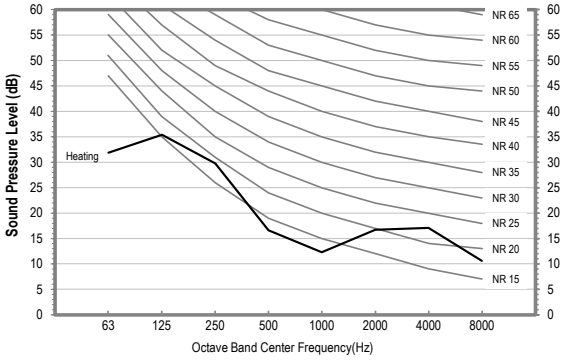

4) AE120*XYD**/EU + AE200DNWMPK/EU

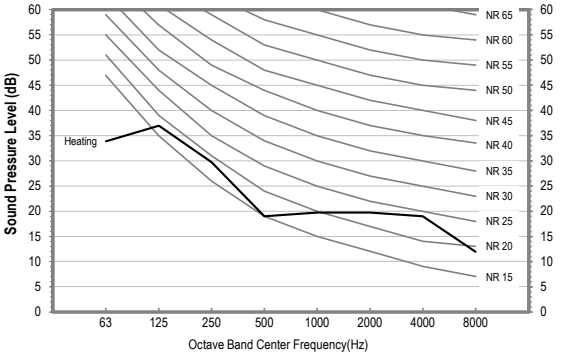

NOTE

- Specifications may be subject to change without prior notice.
- Sound Pressure Level
  - Sound pressure level is obtained in an anechoic room.
  - Sound pressure level is a relative value, depending on the distance and acoustic environment.
  - Sound pressure level may differ depending on operation condition.
  - dBA = A weighted sound pressure level
  - Reference acoustic pressure 0 dB = 20μPa

3. Indoor units

3-5. Sound data

Sound Pressure level

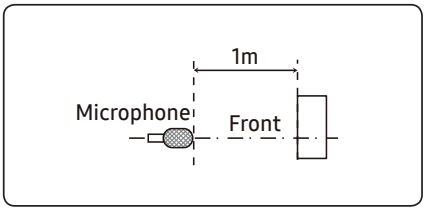

Unit: dB(A)

Model	Heating
AE140*XYD**/EU + AE200DNWMPK/EU	28
AE160*XYD**/EU + AE200DNWMPK/EU	28
AE050*XYD**/EU + AE160DNZMPK/EU	28
AE080*XYD**/EU + AE160DNZMPK/EU	28

- NR Curve

1) AE140*XYD**/EU + AE200DNWMPK/EU

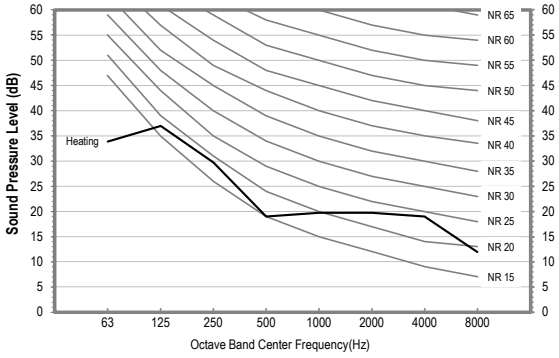

2) AE160*XYD**/EU + AE200DNWMPK/EU

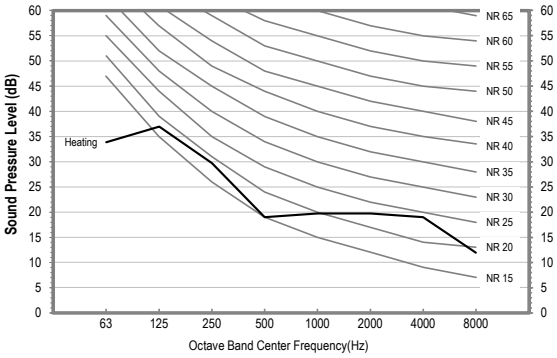

3) AE050*XYD**/EU + AE160DNZMPK/EU

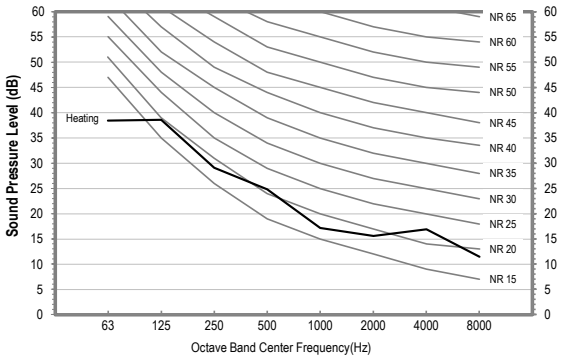

4) AE080*XYD**/EU + AE160DNZMPK/EU

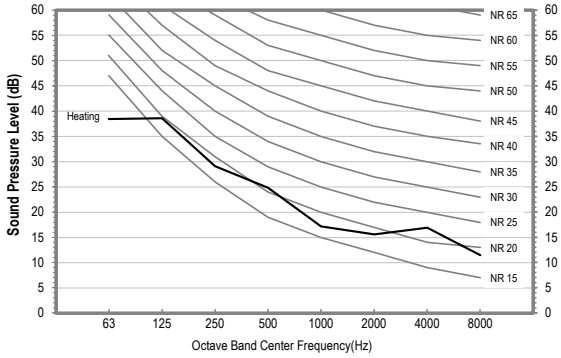

NOTE

- Specifications may be subject to change without prior notice.
- Sound Pressure Level
  - Sound pressure level is obtained in an anechoic room.
  - Sound pressure level is a relative value, depending on the distance and acoustic environment.
  - Sound pressure level may differ depending on operation condition.
  - dBA = A weighted sound pressure level
  - Reference acoustic pressure 0 dB = 20μPa

3. Indoor units

3-5. Sound data

Sound Pressure level

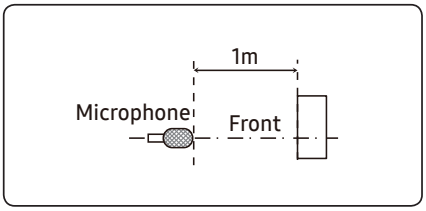

Unit: dB(A)

Model	Heating
AE120*XYD**/EU + AE160DNZMPK/EU	30
AE140*XYD**/EU + AE160DNZMPK/EU	30
AE160*XYD**/EU + AE160DNZMPK/EU	30
AE050*XYD**/EU + AE160DNYMPK/EU	26

- NR Curve

1) AE120*XYD**/EU + AE160DNZMPK/EU

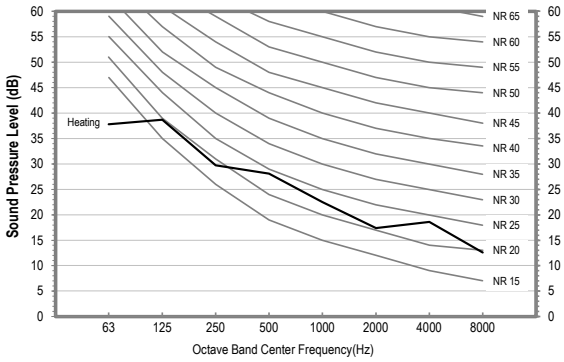

2) AE140*XYD**/EU + AE160DNZMPK/EU

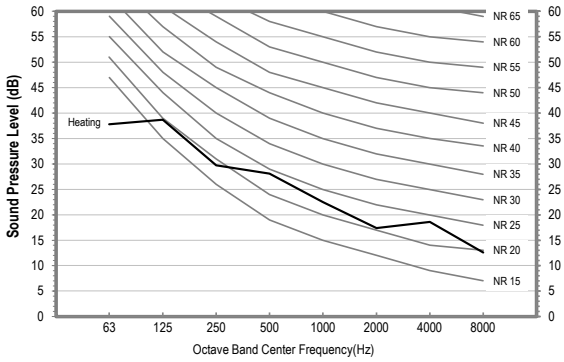

3) AE160*XYD**/EU + AE160DNZMPK/EU

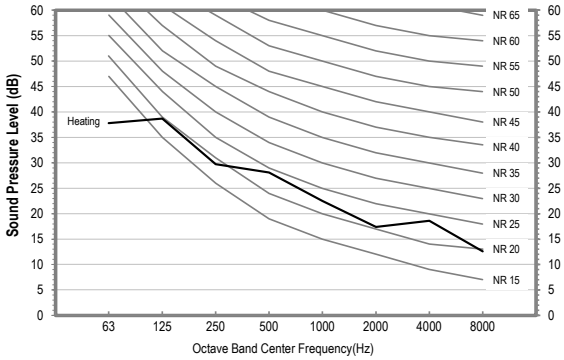

4) AE050*XYD**/EU + AE160DNYMPK/EU

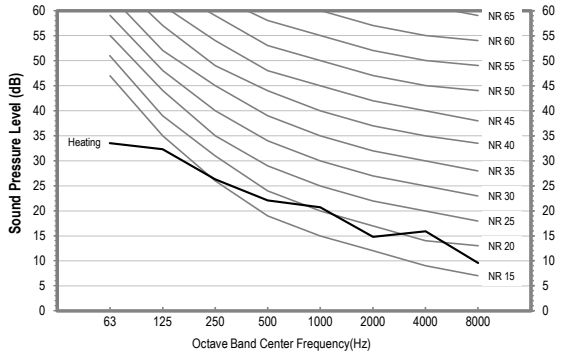

NOTE

- Specifications may be subject to change without prior notice.
- Sound Pressure Level
  - Sound pressure level is obtained in an anechoic room.
  - Sound pressure level is a relative value, depending on the distance and acoustic environment.
  - Sound pressure level may differ depending on operation condition.
  - dBA = A weighted sound pressure level
  - Reference acoustic pressure 0 dB = 20μPa

3. Indoor units

3-5. Sound data

Sound Pressure level

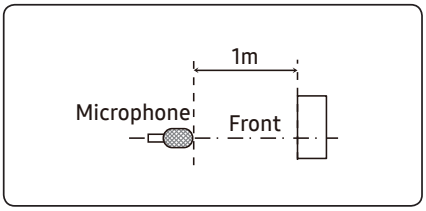

Unit: dB(A)

Model	Heating
AE080*XYD**/EU + AE160DNYMPK/EU	26
AE120*XYD**/EU + AE160DNYMPK/EU	28
AE140*XYD**/EU + AE160DNYMPK/EU	28
AE160*XYD**/EU + AE160DNYMPK/EU	28

- NR Curve

1) AE080*XYD**/EU + AE160DNYMPK/EU

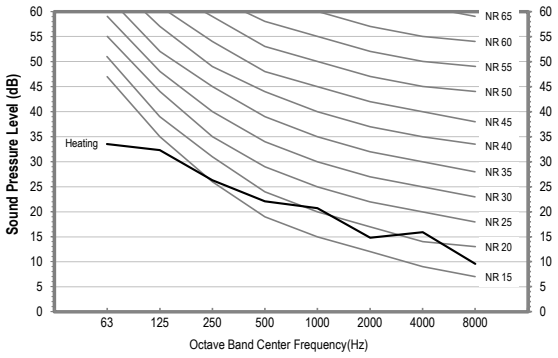

2) AE120*XYD**/EU + AE160DNYMPK/EU

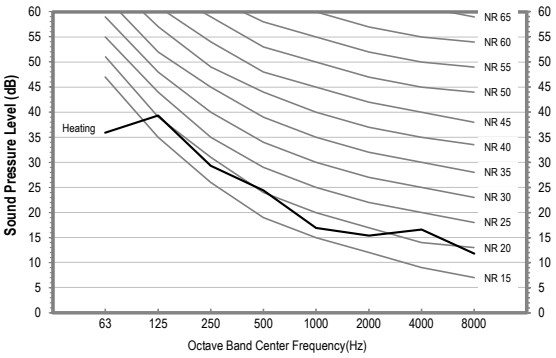

3) AE140*XYD**/EU + AE160DNYMPK/EU

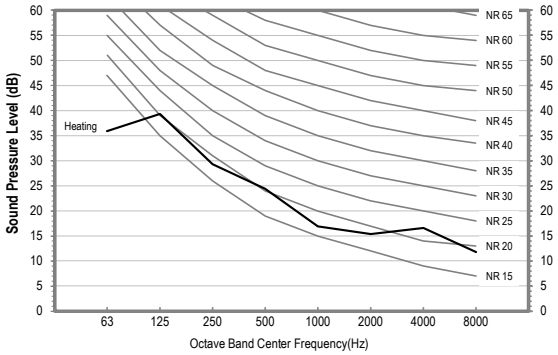

4) AE160*XYD**/EU + AE160DNYMPK/EU

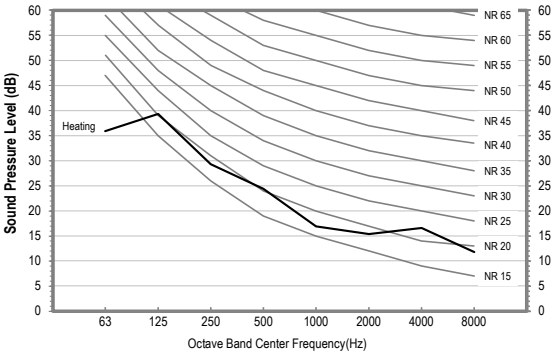

NOTE

- Specifications may be subject to change without prior notice.
- Sound Pressure Level
  - Sound pressure level is obtained in an anechoic room.
  - Sound pressure level is a relative value, depending on the distance and acoustic environment.
  - Sound pressure level may differ depending on operation condition.
  - dBA = A weighted sound pressure level
  - Reference acoustic pressure 0 dB = 20μPa

3. Indoor units

3-5. Sound data

Sound Power level

NOTE

- Specifications may be subject to change without prior notice
  - Sound power level is an absolute value that a sound source generates.
  - dBA = A-weighted sound power level.
  - Reference power : 1pW.
  - Measured according to ISO 3741.

Unit: dB(A)

Model	Heating
AE050*XYD**/EU + AE200DNXMPK/EU	42
AE080*XYD**/EU + AE200DNXMPK/EU	42
AE120*XYD**/EU + AE200DNXMPK/EU	44
AE140*XYD**/EU + AE200DNXMPK/EU	44

- NR Curve

1) AE050*XYD**/EU + AE200DNXMPK/EU

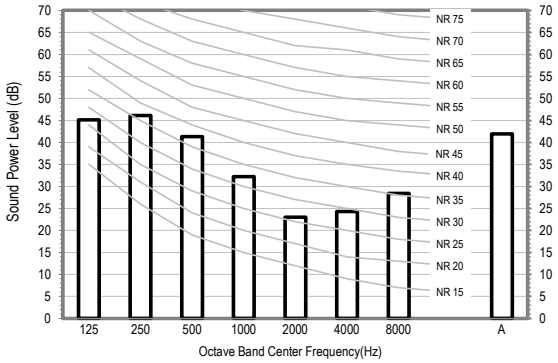

2) AE080*XYD**/EU + AE200DNXMPK/EU

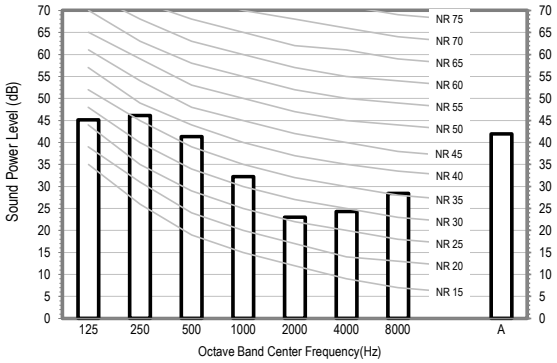

3) AE120*XYD**/EU + AE200DNXMPK/EU

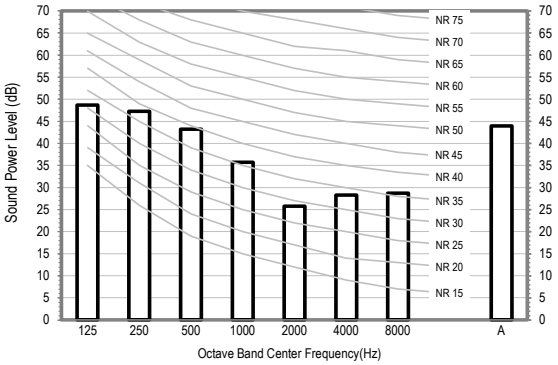

4) AE140*XYD**/EU + AE200DNXMPK/EU

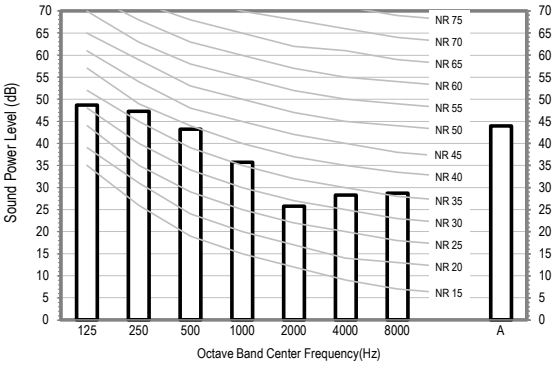

3. Indoor units

3-5. Sound data

Sound Power level

NOTE

- Specifications may be subject to change without prior notice
  - Sound power level is an absolute value that a sound source generates.
  - dBA = A-weighted sound power level.
  - Reference power : 1pW.
  - Measured according to ISO 3741.

Unit: dB(A)

Model	Heating
AE160*XYD**/EU + AE200DNXMPK/EU	44
AE050*XYD**/EU + AE200DNWMPK/EU	40
AE080*XYD**/EU + AE200DNWMPK/EU	40
AE120*XYD**/EU + AE200DNWMPK/EU	42

- NR Curve

1) AE160*XYD**/EU + AE200DNXMPK/EU

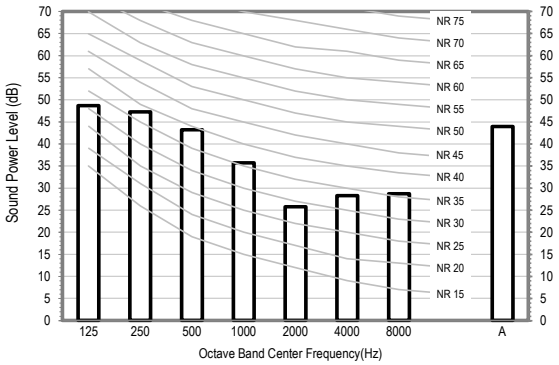

2) AE050*XYD**/EU + AE200DNWMPK/EU

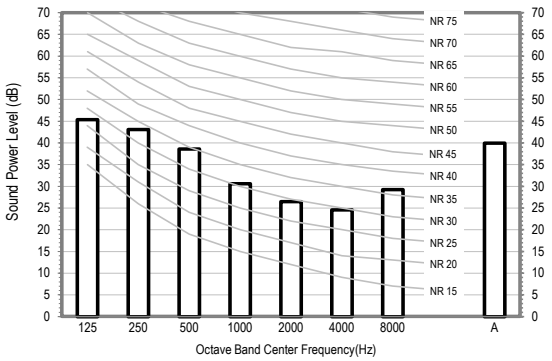

3) AE080*XYD**/EU + AE200DNWMPK/EU

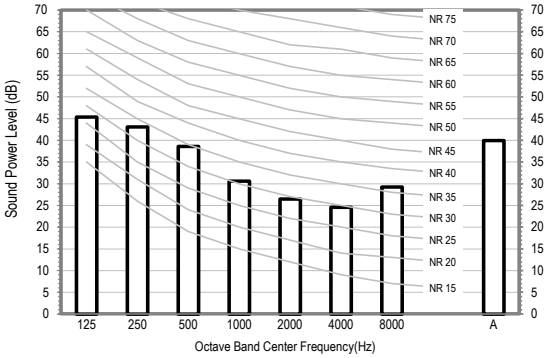

4) AE120*XYD**/EU + AE200DNWMPK/EU

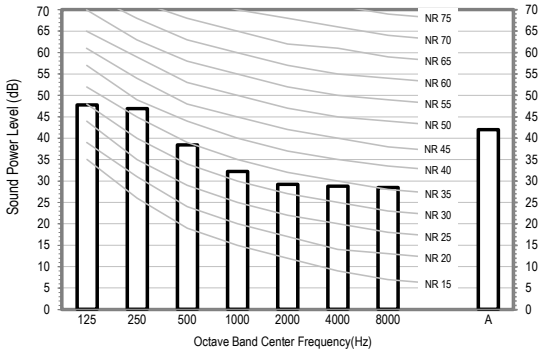

3. Indoor units

3-5. Sound data

Sound Power level

NOTE

- Specifications may be subject to change without prior notice
  - Sound power level is an absolute value that a sound source generates.
  - dBA = A-weighted sound power level.
  - Reference power : 1pW.
  - Measured according to ISO 3741.

Unit: dB(A)

Model	Heating
AE140*XYD**/EU + AE200DNWMPK/EU	42
AE160*XYD**/EU + AE200DNWMPK/EU	42
AE050*XYD**/EU + AE160DNZMPK/EU	42
AE080*XYD**/EU + AE160DNZMPK/EU	42

- NR Curve

1) AE050*XYD**/EU + AE200DNWMPK/EU

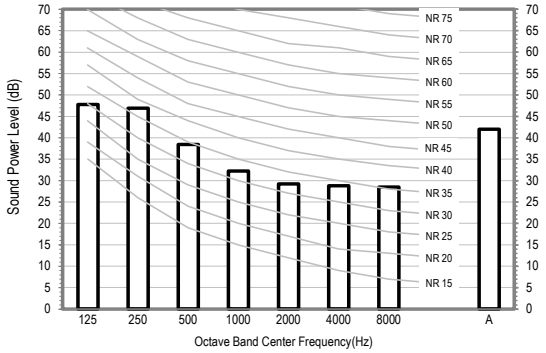

2) AE080*XYD**/EU + AE200DNWMPK/EU

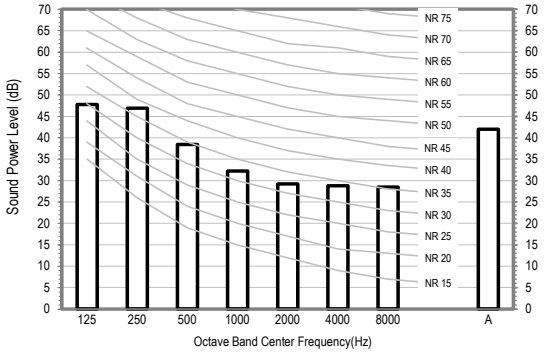

3) AE120*XYD**/EU + AE200DNWMPK/EU

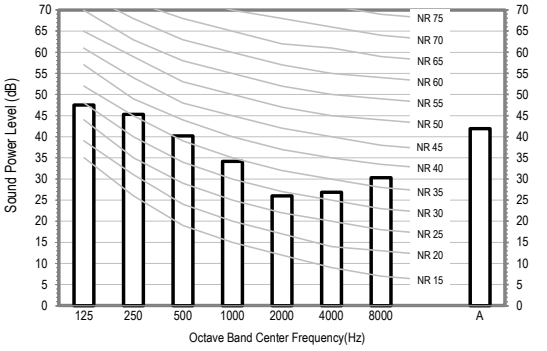

4) AE160*XYD**/EU + AE200DNWMPK/EU

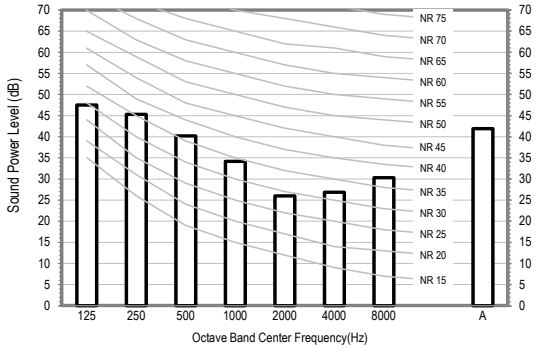

3. Indoor units

3-5. Sound data

Sound Power level

NOTE

- Specifications may be subject to change without prior notice
  - Sound power level is an absolute value that a sound source generates.
  - dBA = A-weighted sound power level.
  - Reference power : 1pW.
  - Measured according to ISO 3741.

Unit: dB(A)

Model	Heating
AE120*XYD**/EU + AE160DNZMPK/EU	44
AE140*XYD**/EU + AE160DNZMPK/EU	44
AE160*XYD**/EU + AE160DNZMPK/EU	44
AE050*XYD**/EU + AE160DNYMPK/EU	40

- NR Curve

1) AE120*XYD**/EU + AE160DNZMPK/EU

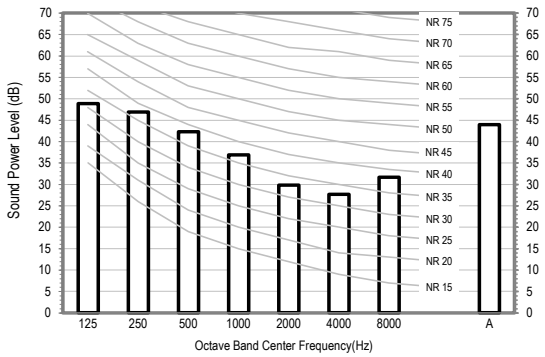

2) AE140*XYD**/EU + AE160DNZMPK/EU

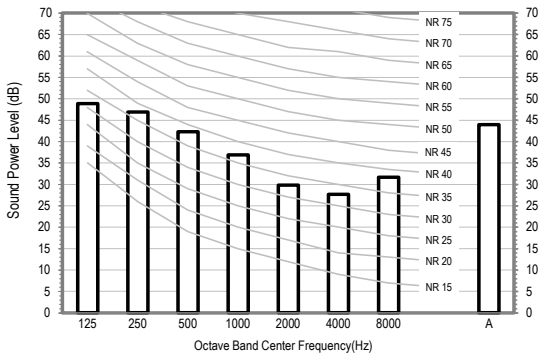

3) AE160*XYD**/EU + AE160DNZMPK/EU

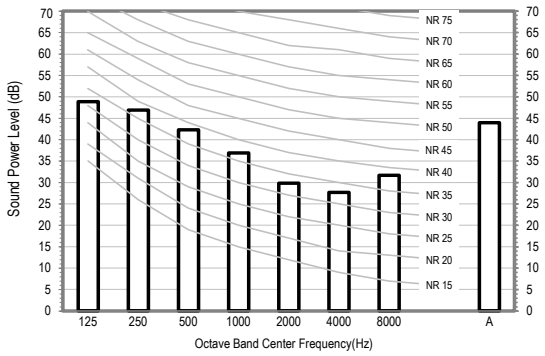

4) AE050*XYD**/EU + AE160DNYMPK/EU

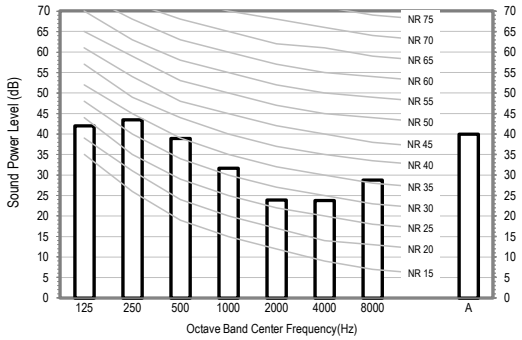

3. Indoor units

3-5. Sound data

Sound Power level

NOTE

- Specifications may be subject to change without prior notice
  - Sound power level is an absolute value that a sound source generates.
  - dBA = A-weighted sound power level.
  - Reference power : 1pW.
  - Measured according to ISO 3741.

Unit: dB(A)

Model	Heating
AE080*XYD**/EU + AE160DNYMPK/EU	40
AE120*XYD**/EU + AE160DNYMPK/EU	42
AE140*XYD**/EU + AE160DNYMPK/EU	42
AE160*XYD**/EU + AE160DNYMPK/EU	42

- NR Curve

1) AE080*XYD**/EU + AE160DNYMPK/EU

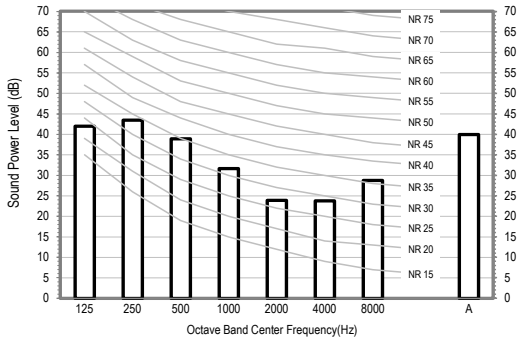

2) AE120*XYD**/EU + AE160DNYMPK/EU

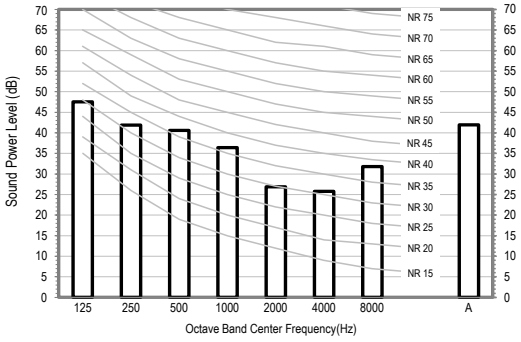

3) AE140*XYD**/EU + AE160DNYMPK/EU

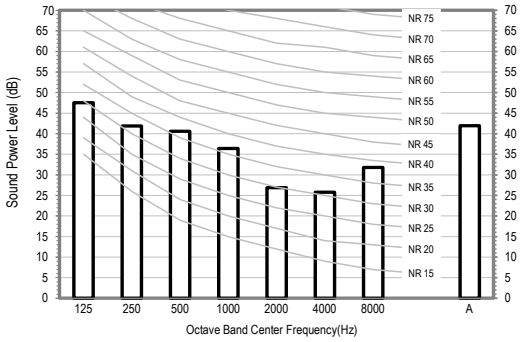

4) AE160*XYD**/EU + AE160DNYMPK/EU

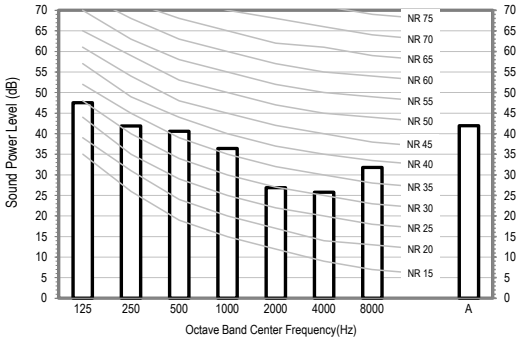

3. Indoor units

3-6. Piping diagram

AE200DNWMPK/EU (Standard)

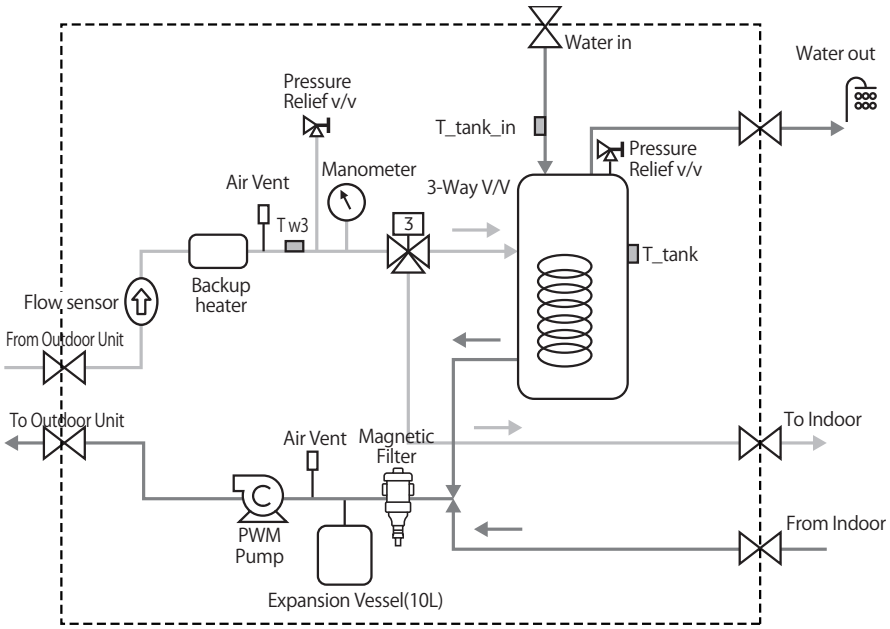

AE200DNXMPK/EU (Standard + 2 Zone kit)

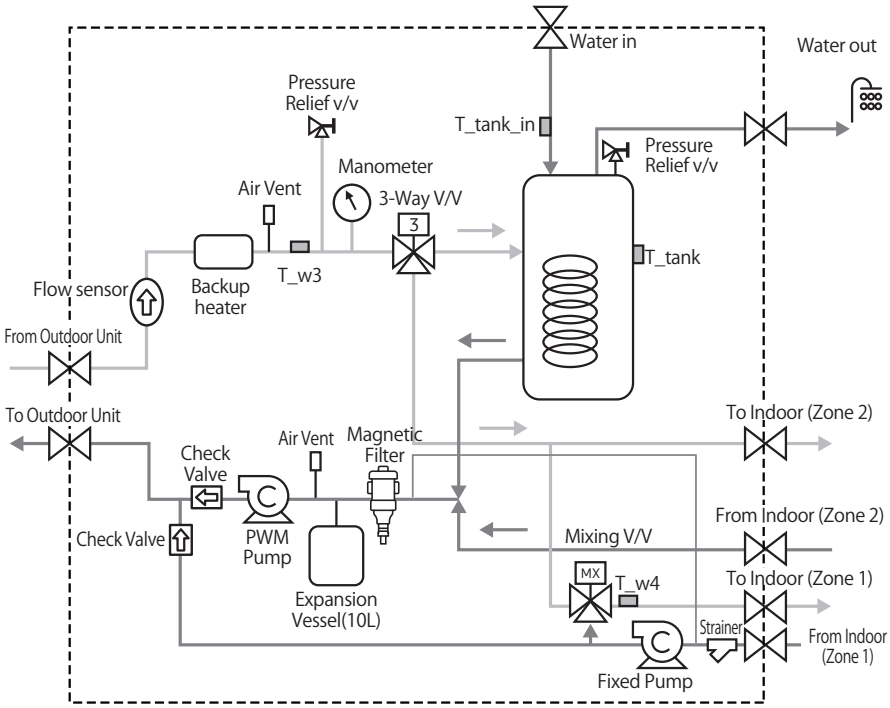

3. Indoor units

3-6. Piping diagram

AE016DNYMPK/EU (Standard)

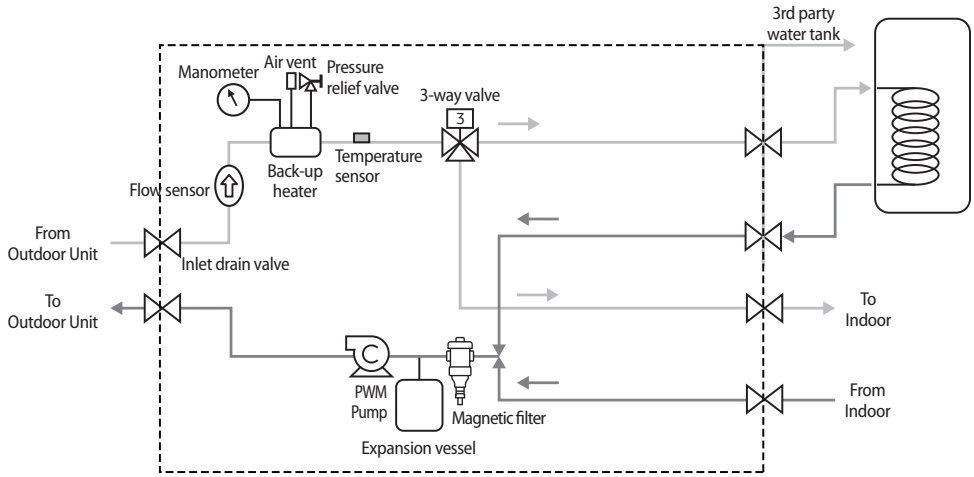

AE016DNZMPK/EU (Standard + 2 Zone kit)

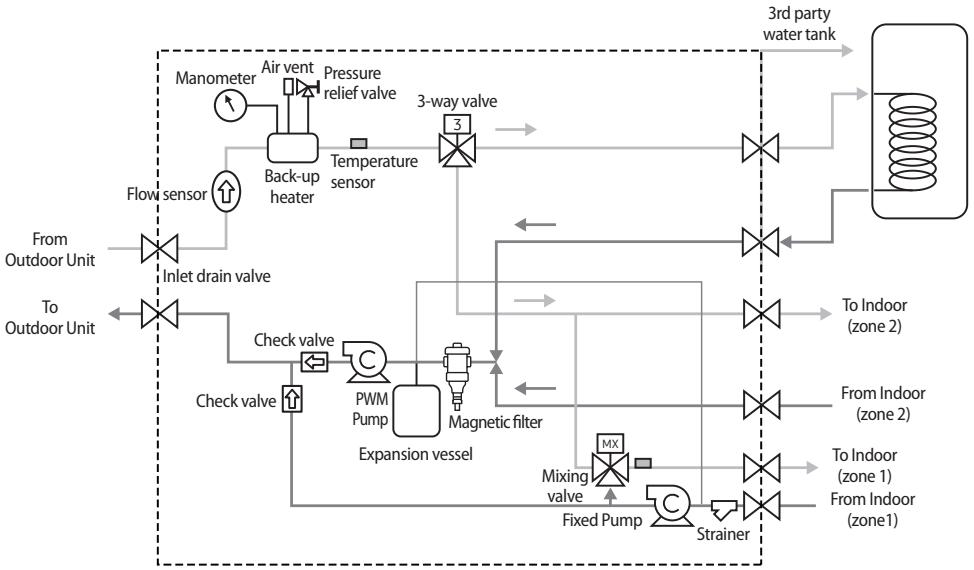

4. Installation

Indoor unit

ClimateHub

Application 1: Space heating + water heating

*AE200DNWMPK(Standard)

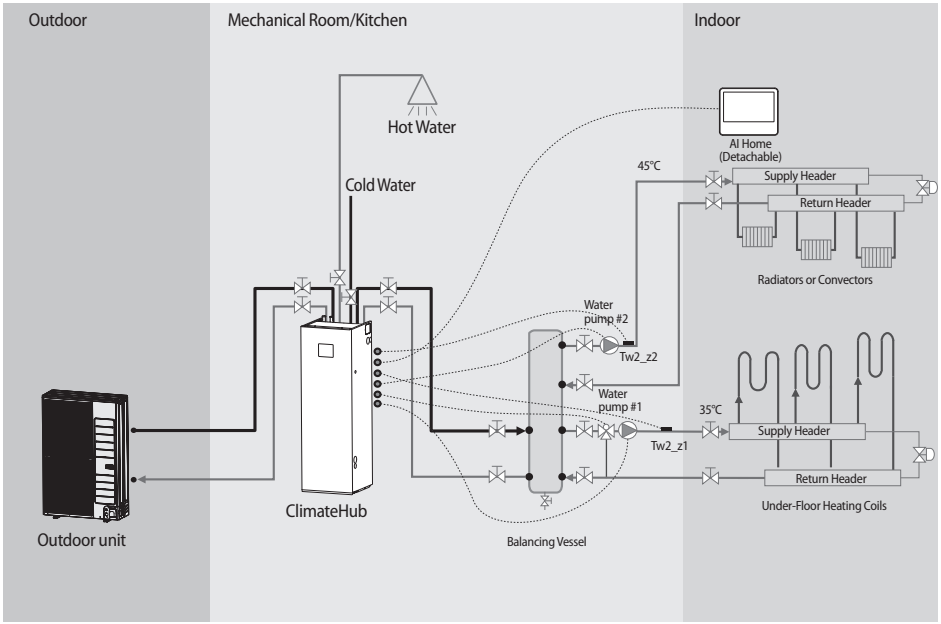

* AE200DNXMPK(2 Zone)

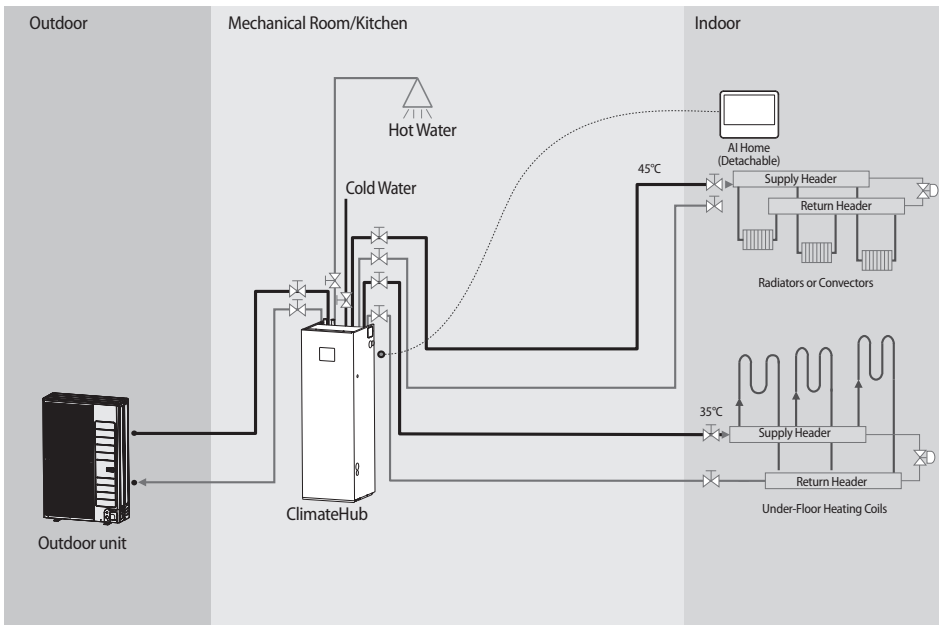

4. Installation

Indoor unit

ClimateHub

Application 2: Hybrid application(backup boiler)

*AE200DNWMPK(Standard)

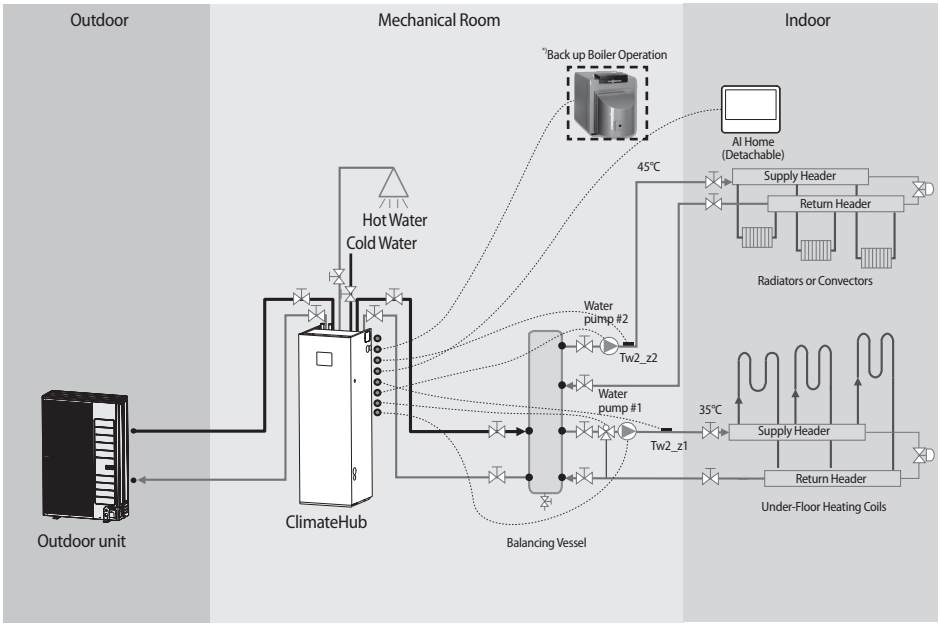

*) We control only the on / off signal of backup boiler according to outdoor temperature.
Backup boiler should be installed with own device according to the field condition.

* AE200DNXMPK(2 Zone)

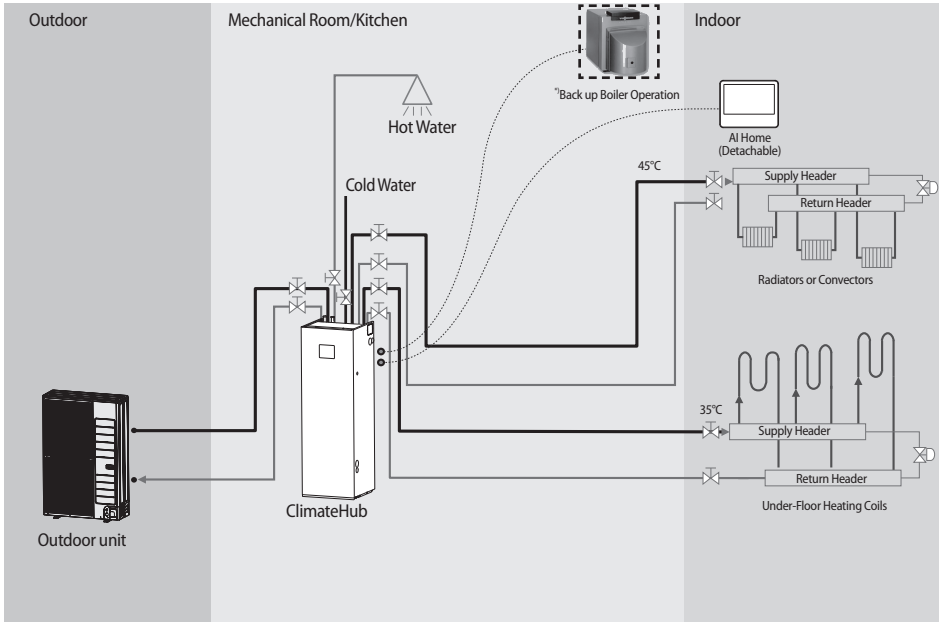

*) We control only the on / off signal of backup boiler according to outdoor temperature.
Backup boiler should be installed with own device according to the field condition.

CAUTION
- Samsung has not responsible for performance and stability of backup boiler.
- Water quality must be according to Directive (EU) 2020/2184.

4. Installation

Indoor unit

ClimateHub

Pipe work

Water pipe work

The hydro unit is equipped with components listed on the table below.

All entering, leaving water direction is embossed right next to the pipe. Please connect the pipe with attention to the direction of the arrow.

Whole water plumbing system including Hydro unit shall be installed by a qualified technician and must comply with all relevant European and national regulations.

- ▶ Allowable water pressure of hydro unit is maximum 3.0 bar.
- ▶ An air-vent valve is integrated on the hydro unit. Please check that air-vent valve is not overtightened so the air-vent valve can release any air out of the system during system operation.
- ▶ AE200DNX*** (2zone built-in type) is designed to supply water at 2 different temperatures.
  - For heating operations, please connect the Zone 1 supply line to a room that requires a lower water temperature (ex,underfloor heating) and the Zone 2 supply line to a room that requires a higher water temperature (ex,radiators).

NOTE

If you install AE200DNX*** (2zone built-in type) as a single-zone application, then:

- Install a bypass line between the water inlet and outlet for Zone 1 and use Zone 2 for space heating.
- Change FSV Setting #4061=0(Zone control= No), #4041=0 (Mixing V/v control= No)

CAUTION

- In case of the zone 1 is not used, in/out pipe should not be blocked sepalately, and it must be connected to the Bypass line.

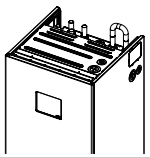

❋ AE200DNWMPK

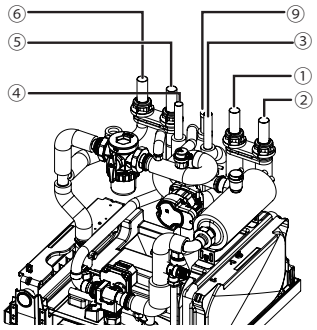

❋ AE200DNXMPK

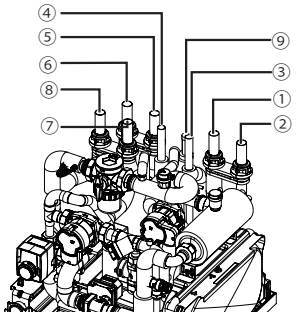

No	Size	Name		Type
		AE200DNWMPK	AE200DNXMPK	
①	Φ28, T1.2, Copper	Outdoor inlet (From Outdoor Unit)	Heating Outlet (Zone 1) (To Zone 1)	Straight pipe
②	Φ28, T1.2, Copper	Outdoor outlet (To Outdoor Unit)	Heating inlet (Zone 1) (From Zone 1)	
③	Φ22, T1.0, Copper	DHW outlet (Hot Water)	DHW outlet (Hot Water)	
④	Φ22, T1.0, Copper	DHW inlet (Cold Water)	DHW inlet (Cold Water)	
⑤	Φ28, T1.2, Copper	Heating Outlet (To Zone)	Outdoor outlet (To Outdoor Unit)	
⑥	Φ28, T1.2, Copper	Heating inlet (From Zone)	Heating Outlet (Zone 2) (To Zone 2)	
⑦	Φ28, T1.2, Copper	N/A	Outdoor inlet (From Outdoor Unit)	
⑧	Φ28, T1.2, Copper	N/A	Heating inlet (Zone 2) (From Zone 2)	
⑨	Φ22, T1 .0, Copper	DHW Return (Recirculation)	DHW Return (Recirculation)	straight pipe with cap

4. Installation

Indoor unit

ClimateHub

ESP(External Static Pressure) Diagram

The illustration below shows the external static pressure of the unit depending on the water flow and the pump setting.

AE200DNW***

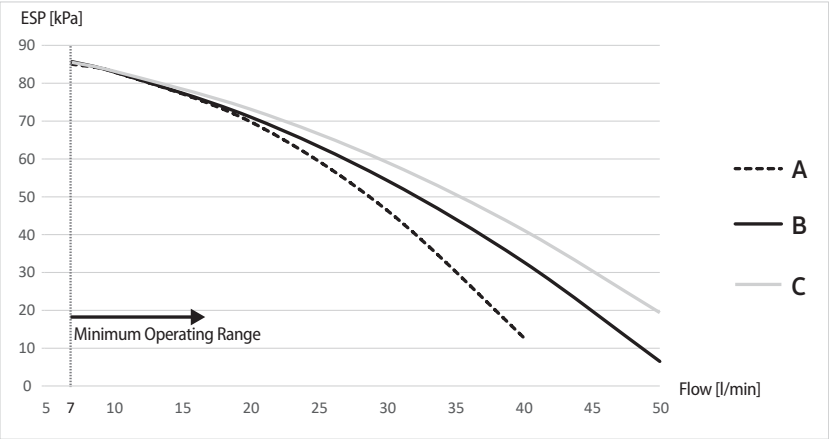

AE200DNX***

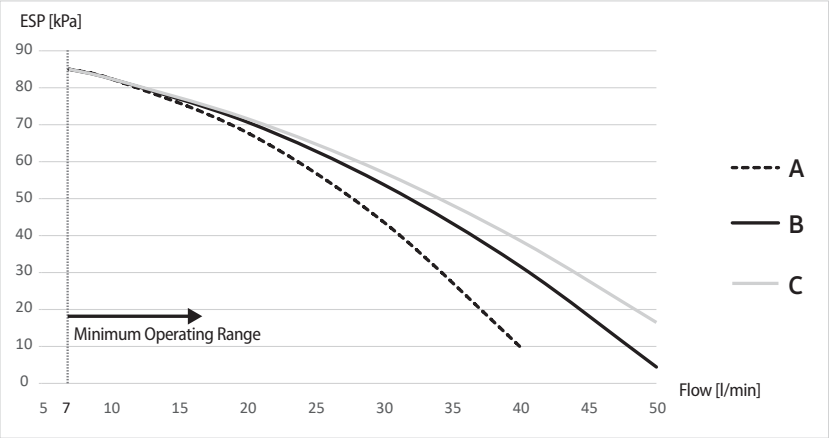

When ESP is not enough, additional pump should be installed. In this case, install the PWM control external type pump (Heating type) additionally.

*A: AE050(080)RXYD*G, AE050(080)CXYD*K

*B: AE120(160)RXYD*G, AE080BXYD*G, AE120(160)CXYD*K

*C: AE120(140)BXYD*G

Connection guide of additional pump

Ensuring proper water flow is an important factor for performance and efficiency.

If the water flow is not adequate, consider installing additional pumps.

When installing an additional pump, the system's maximum allowable water flow rate and maximum water pressure should not be exceeded.

CAUTION

- Each terminal set (Live+Neutral) for additional pumps can supply ampere up to Max 1.0A.
- If an additional pump is needed, the additional pump should be installed in a designated location according to the installation case below
- [Case I] AE200DNX***: additional pump should be installed in the Zone2 piping line
- [Case II] AE200DNW***: additional pump should be installed in the Zone piping line
- For the above installation cases, refer to wire works cases 1 and 2.
- If an additional pump is needed for Zone1 in AE200DNX***, refer to wire works case 3.
- The maximum number of pumps that can be powered by the terminal block of the hydro unit is two. Therefore, if necessary, be sure to connect pumps other than the two to a separate power source.
- Ex) AE200DNX*** already has 2 pumps (Inverter and fixed pump). In this case, all additional pumps should be connected to a separate power source. For AE200DNW*** including only one main pump, one additional pumps can be drived by the terminal block of the hydro unit without using a separate power source.

4. Installation

Indoor unit

ClimateHub

Case 1) AC pump

The terminal set (B8+B7) can supply ampere up to Max 1.0A.

1. Power supply (Pump)

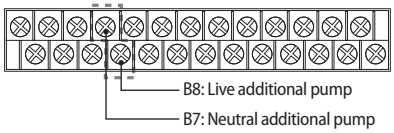

2. If the maximum output of the pump exceeds 1A, please connect it to a separate power source.

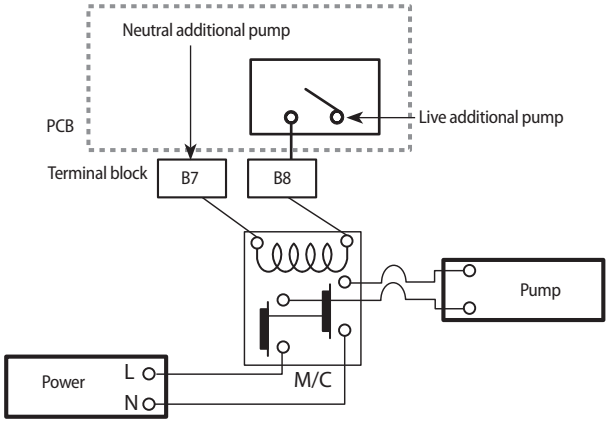

CAUTION
- The maximum allowable current that this terminal block can supply for the additional water pump is 1.0A.

Case 2) Inverter pump

Power supply connection is the same as the case1) AC pump

PWM characteristic curve

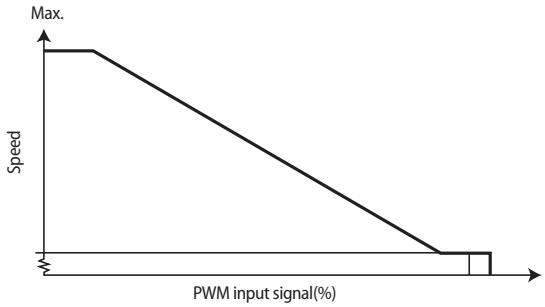

The additional pump should be the same type of product as the above graph.

Recommendation

Connect the PWM control line to the main control PBA output(CNS002) signal function for PWM control. (Note: Wiring diagram)

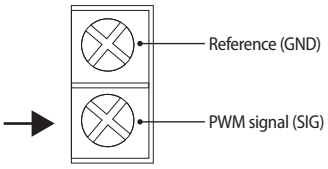

GRUNDFOS UPMM 25-95 (Heating Type), SHINHOO GPA25-9H (Heating Type)

CAUTION
- If there is wrong wiring between PWM and reference, INV. Water Pump may not work or wrong operation.

4. Installation

Indoor unit

ClimateHub

Case 3) Additional pump for Zone 1 in AE200DNX***

Only AC pump can be used as an additional pump for Zone 1 in AE200DNX***.
The pump should be installed in piping line of Zone1 and connected to a separate power source as figure shown below.

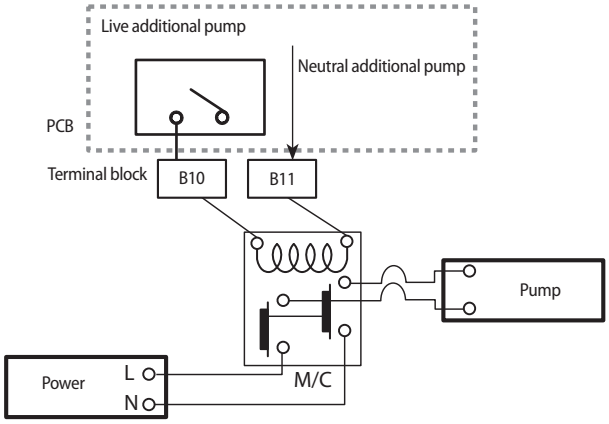

Wiring work

Connection of the power supply and communication cable

Model	Description		No. of Wires	Max. A	Thickness	Supply Scope
AE200DN****	Main power (1Phase)		2 + ground	5 A	1.5mm² ↑ H05RN-F or H07RN-F	Field Supply (220-240Vac, Input)
	Heater power	3 Phase heater (6 kW)	4 + ground	9.1 A	2.5mm² ↑ H05RN-F or H07RN-F	Field Supply (380-415Vac, Input)
		1 Phase Heater (4 kW)	2+ ground	18.2A	4.0mm2 ↑ H05RN-F or H07RN-F	Field Supply (220-240Vac, Input)
		1 Phase Heater (2 kW)	2+ ground	9.1A	2.5mm2 ↑ H05RN-F or H07RN-F	Field Supply (220-240Vac, Input)
	Communication		2	0.1 A	0.75mm² ↑ H05RN-F or H07RN-F	Field Supply (~Vdc, Data)

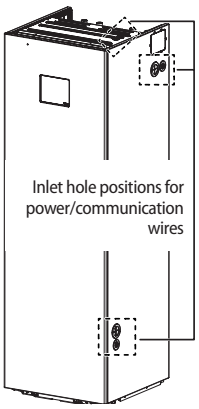

* When you use inlet hole through the cabinet top positions for power/communication wires, please fix the wire by using holder of the cabinet right.

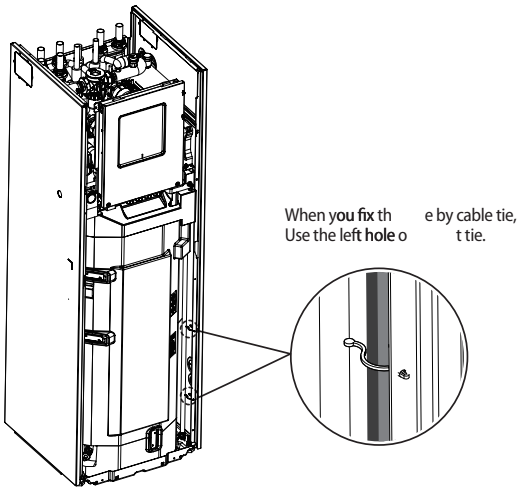

4. Installation

Indoor unit

ClimateHub

Communication cable connection

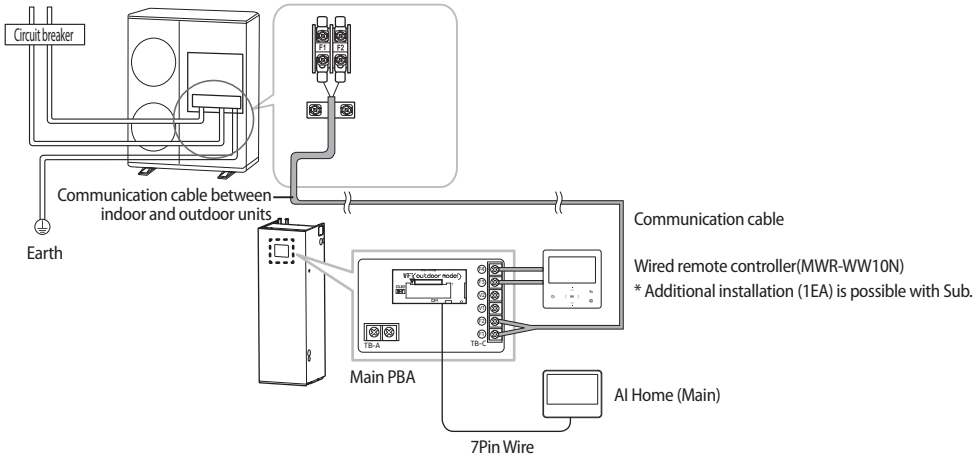

CAUTION
- Main and heater power must be configured through each ELCB or MCCB + ELB.
- Backup heater should use the right power according to the power of the outdoor unit.

1. 1 phase product

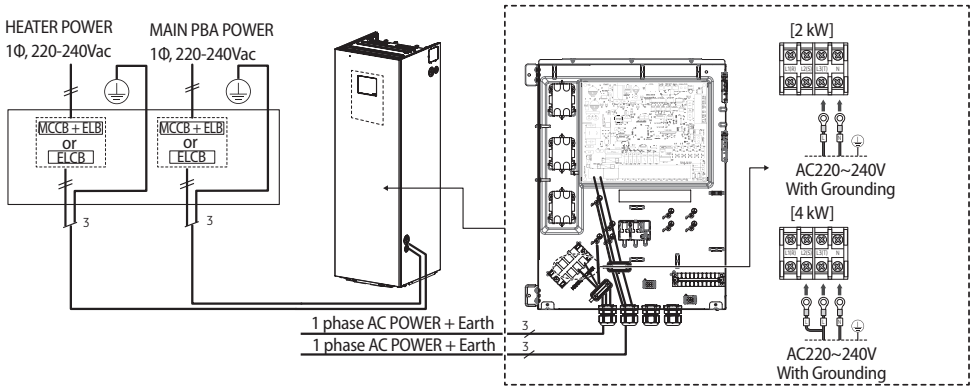

2. 3 phase product

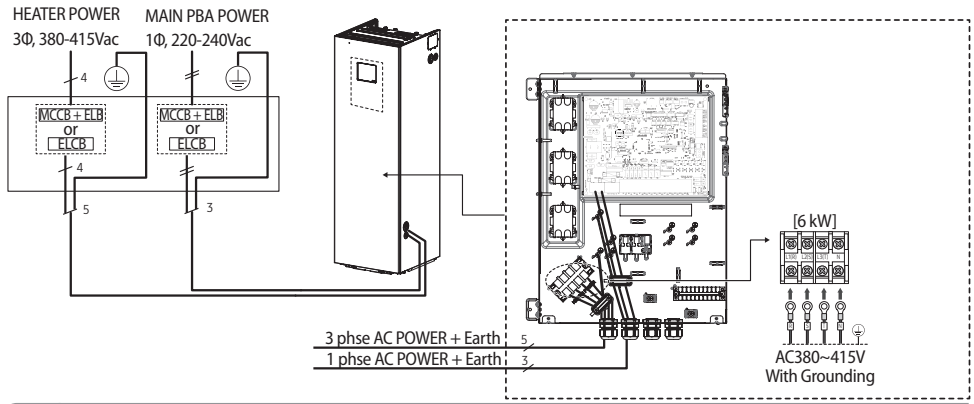

CAUTION
- **Circuit Breaker (ELCB or MCCB + ELB) for outdoor and indoor units shall be installed by installers because they are not sub-parts in the units.**
- If the supply cable is damaged, it must be replaced by a special cable or assembly available from the manufacturer or installer.
- It cause damage to chassis, PCB parts if the main power is not connected correctly. You should make certain that R, S, T is connected correctly before turning on the main power. (3 phase models only)

❋ ELCB: Earth leakage circuit breaker
ELB: Earth leakage breaker
MCCB: Molded case circuit breaker

4. Installation

Indoor unit

ClimateHub

Two thermostat control

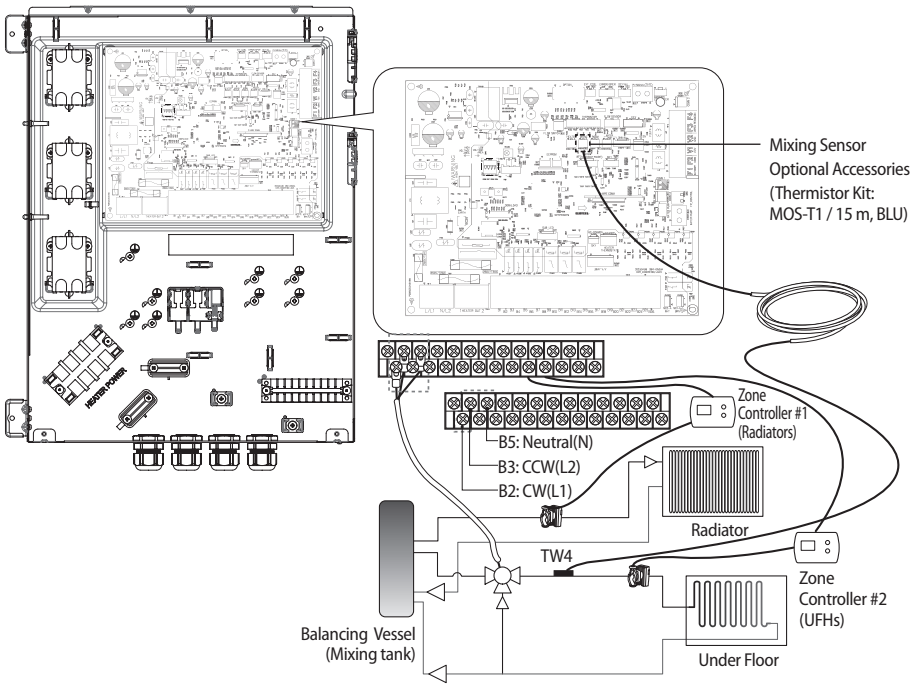

1. Before the installation, hydro unit should be turned off.
2. Using the appropriate equipment to correct position of terminal block as shown on the diagram.
3. Install the supplied Mixing temperature sensor (TW4) on the mixed water side within 1 m from the Mixing Valve, as shown in the figure above.
4. Set the FSV value #4041~ #4046. Please refer to the controller manual for this setting.

CAUTION

- When using Zone control (FSV 4061 = 1), ignore Thermostat signal.

4. Installation

Indoor unit

ClimateHub

2 Zone Control [FSV #4061 =1]

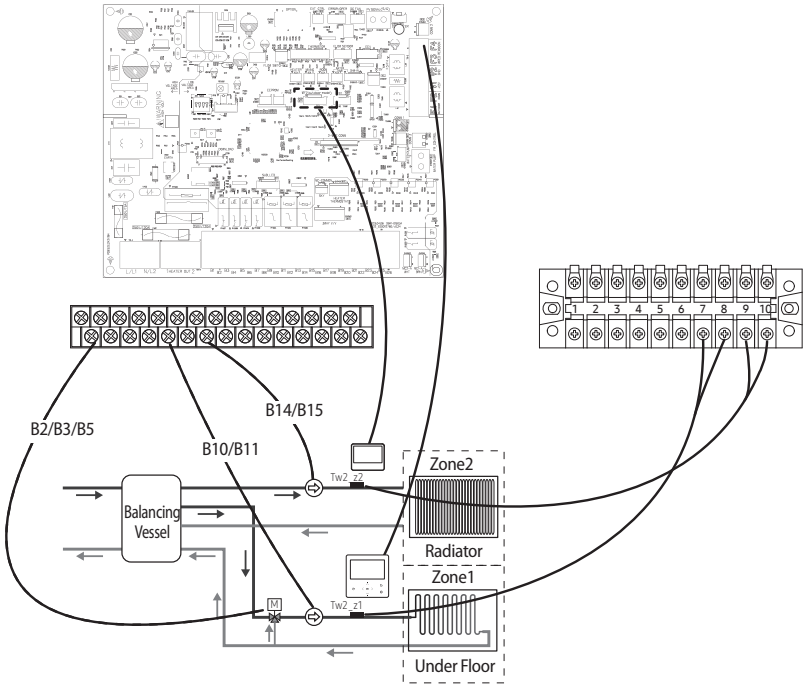

You can operate the 2 Zone control using a mixing value, water-out temperature sensors, and built-in or external room temperature sensors installed in a wired remote controller.
When both zones are simultaneously Thermo on, the operation is performed based on Zone2. Therefore, set the zone that you want to have the higher set temperature to Zone2.
(The mixing valve must be installed in the zone that you want to have the lower set temperature.)

1. Install the mixing valve. (See "Installation of mixing valve.")
2. Install the water-out temperature sensors (Tw2_z1, Tw2_z2) for all zones.
3. Unlike the zone control with a thermostat, connect the water pump signal lines to the product.

► Zone1 water pump connection: B10 (L1) + B11 (N)
► Zone2 water pump connection: B14 (L1) + B15 (N)

4. FSV 4061 = 1: Enable the 2 Zone control using the wired remote controller.

* If you want to operate the 2 Zone control by using water-out temperatures, you have only to complete steps 1 to 4 above.
* If you want to operate the 2 Zone control by using room temperatures and built-in temperature sensors in wired remote controllers, you must install two wired remote controllers in each room.
(If you use external room temperature sensors, you can control each room temperature with only one wired remote controller.)

Select a mixing valve from the manufacturers as below (recommended)

Maker		BELIMO	SIEMENS	HONEYWELL
Model code	3 Way Valve	R3020-6P3-S2	VXP45.20-4 (kvs 4)	V5011E1213
	Actuator	LR230A(-S)	SSB31	ML6420A3015
Running time		90 sec.	150 sec.	60 sec.
FSV(#4046) setting		9	15	6

4. Installation

Indoor unit

ClimateHub

Connection of the 3-way valve

Description	No. of wires	Max. current	Thickness	Supply Scope
Diverting type 3way valve	4	50 mA	> 0.75 mm², H05RN-F or H07RN-F	Field supply (220-240V~, Output)

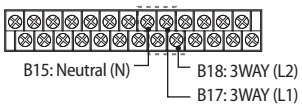

Status	L1	L2
A (Initial)	OFF	ON
B	ON	OFF

Field Setting Valve (#3071) "0" Floor heating as default	Field Setting Valve (#3071) "1" DHW tank as default
A 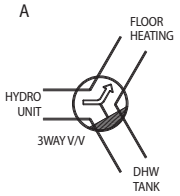	A 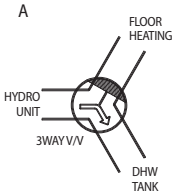
B 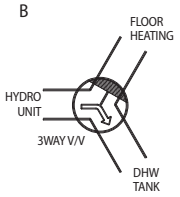	B 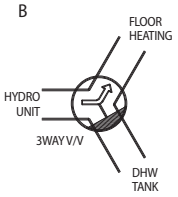

3-way diverting valve for water tank

- ▶ When cooling operating mode, floor heating loops will be closed.
- ▶ 220-240V~

1. Before the installation, hydro unit should be turned off.
2. Using the appropriate equipment to correct position of terminal block as shown on the diagram.
3. Make sure what type of 3 way V/V you use.

Connection of the back-up boiler

- ▶ This function is to determine which heating source can/will provide the space heating, either the heat pump system or the back-up boiler.
- ▶ To control the back-up boiler , configure FSV #4031~ #4033. Please refer to the controller manual for this setting.

Description	No. of wires	Max. current	Thickness	Supply Scope
Back-up Boiler	2+ground	50 mA	0.75mm² H05RN-F or H07RN-F	Field supply (220-240V~, Output)

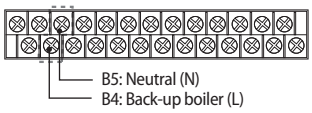

When it set back up boiler on the hydro unit (relay off)

When it order to back up boiler operates (relay on)

1. Before the installation, hydro unit should be turned off.
2. Using the appropriate equipment to correct position of terminal block as shown on the diagram.

❋ Heat pump does not work when the Back-up boiler operates.

4. Installation

Indoor unit

ClimateHub

Connection of the external back-up heater

Description	No. of wires	Max. current	Thickness	Supply Scope
Back-up Heater	2+ground	1A	0.75mm^2 H05RN-F or H07RN-F	Field supply (220-240V~, Output)

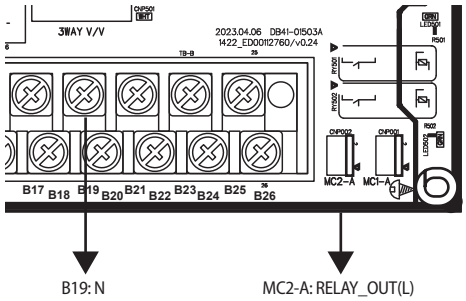

▶ If you need an additional heater, it can be installed as an option.

NOTE
- AE200DNX*** (2 Zone built-in type) is strictly prohibited from installing external back-up heaters.
- An additional back-up heater for AE200DNW*** should be installed on the Zone piping line.

WARNING
- Please make sure to use the heater supplied by "Samsung", and a temperature sensor will also be added.

Connection of the Peak Power Control or PV control(Photovoltaics control)

Description	No. of wires	Max. current	Thickness	Supply Scope
Peak Power Control or PV control (Photovoltaics control)	2	-	-	Field supply

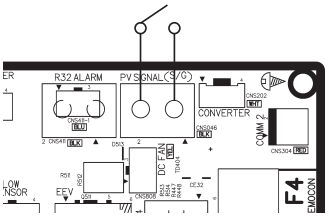

❋ Peak Power Control

▶ This is a function that allows you to disable the backup heater, and compressor operation of the outdoor unit depending on the power input contact.

▶ If users make contracts with local electric power company for limiting the amount of power consumption when a surge in power usage, users can set FSV of "Forced off".

▶ To control the Power Peak , configure FSV #5041~ #5043. Please refer to the controller manual for this setting.

❋ PV control(Photovoltaics control)

▶ This is for energy saving by using the solar energy. (However, Power peak control can not be used at the same time.)

▶ To control PV, configure FSV #5081~ #5083. Please refer to the controller manual for this setting.

NOTE
- Except for domestic hot water mode, This function is activated only for the outing mode.

4. Installation

Indoor unit

ClimateHub

Connection of the FR Control(Frequency ratio control)

Description	No. of wires	Max. current	Thickness	Supply Scope
FR Control	2	-	-	Field supply

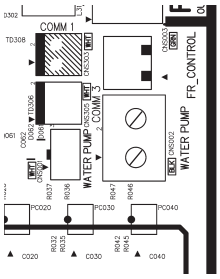

- This is to limit the maximum frequency of the outdoor unit compressor. (if FSV #5051 = 1 "use")
- Method 1: External DC signal Control uses a DC voltage of 0 ~ 10V (0v = 50%, ~ 10v = 150%)
- Method 2: Demand ratio (DR) control through Modbus communication

Connecting for smart grid ready control

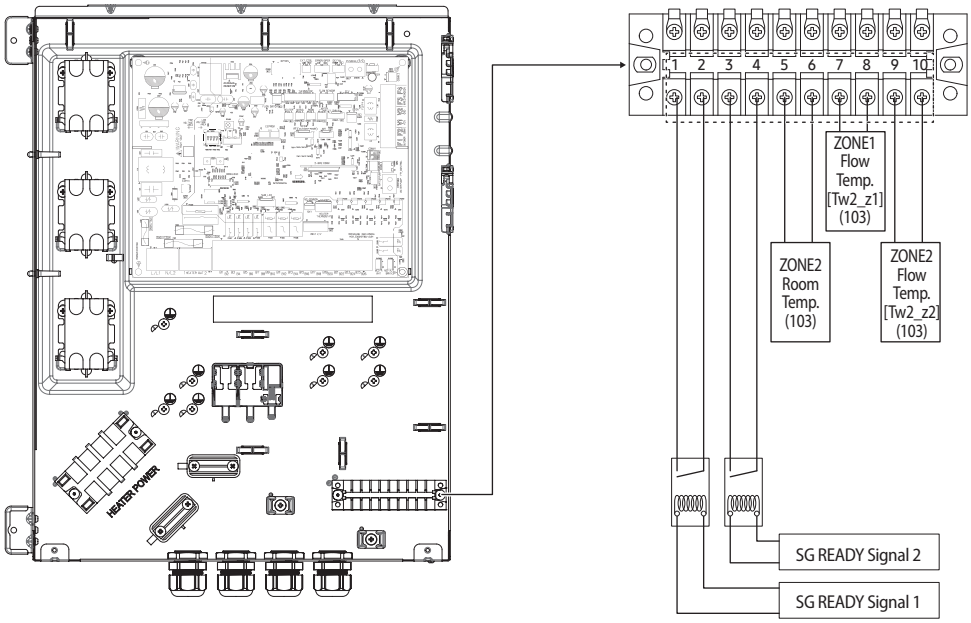

SG READY Signal 1	SG READY Signal 2	Product operation
Short	Open	Forced thermo off operation
Open	Open	Normal operation
Open	Short	Heating / DHW setting temperature 1step-up operation
Short	Short	Heating / DHW setting temperature 2step-up operation

CAUTION
- These parts are optional and not included with the product.
- Maker sure to connect to non-power on/off contacts.

4. Installation

Indoor unit

Hydro Unit

Application 1: Space heating + water heating

✻ AE160DNYMPK(Standard)

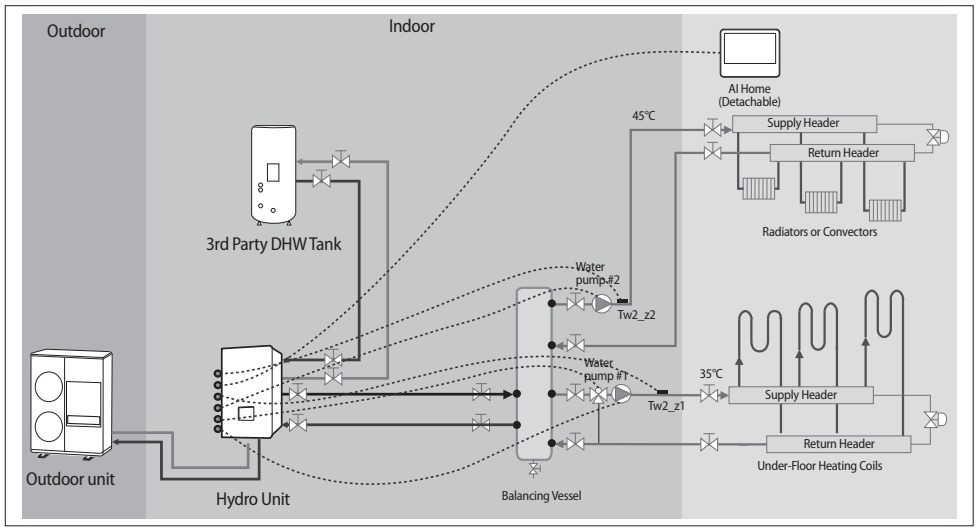

✻ AE160DNZMPK(2 Zone)

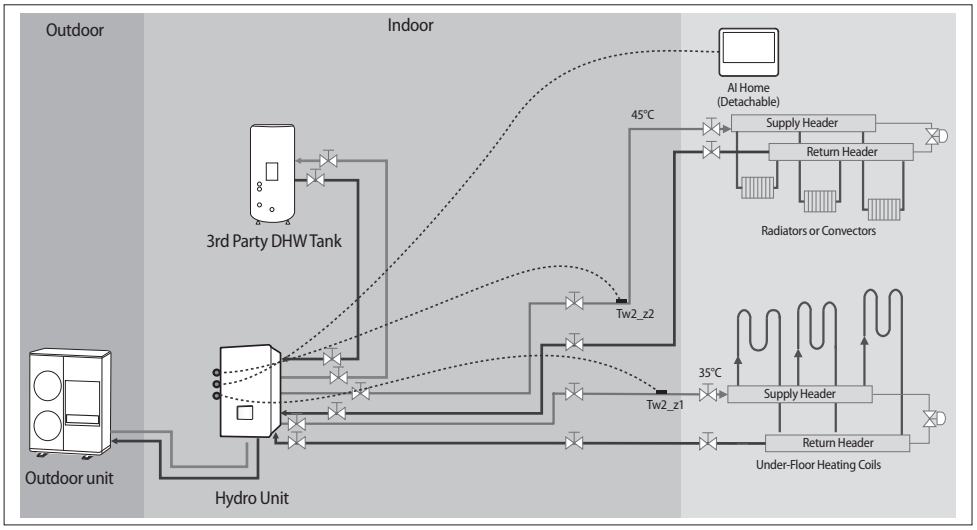

4. Installation

Indoor unit

Hydro Unit

Application 2: Hybrid application(backup boiler and solar panel connected)

✻ AE160DNYMPK(Standard)

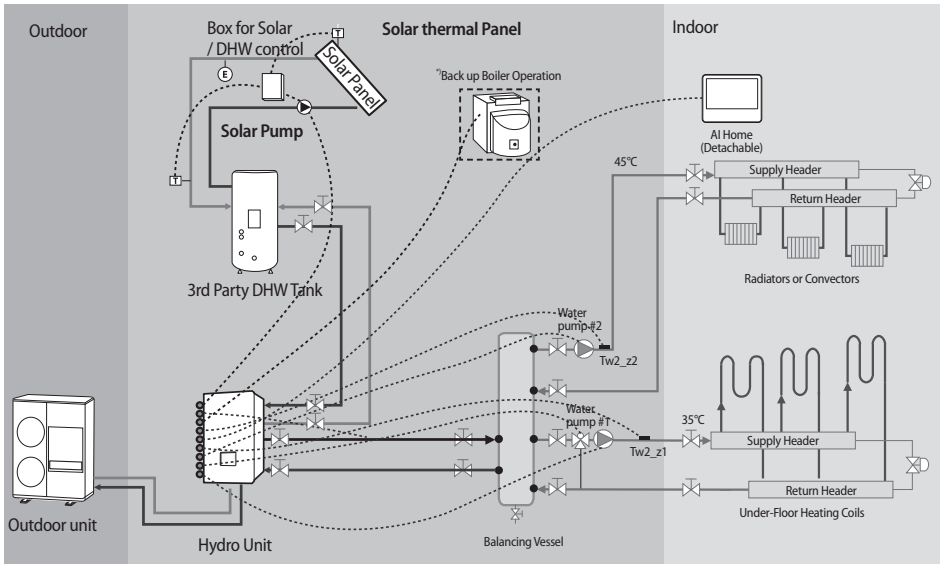

*) We control only the on / off signal of backup boiler according to outdoor temperature.
Backup boiler should be installed with own device according to the field condition.

✻ AE160DNZMPK(2 Zone)

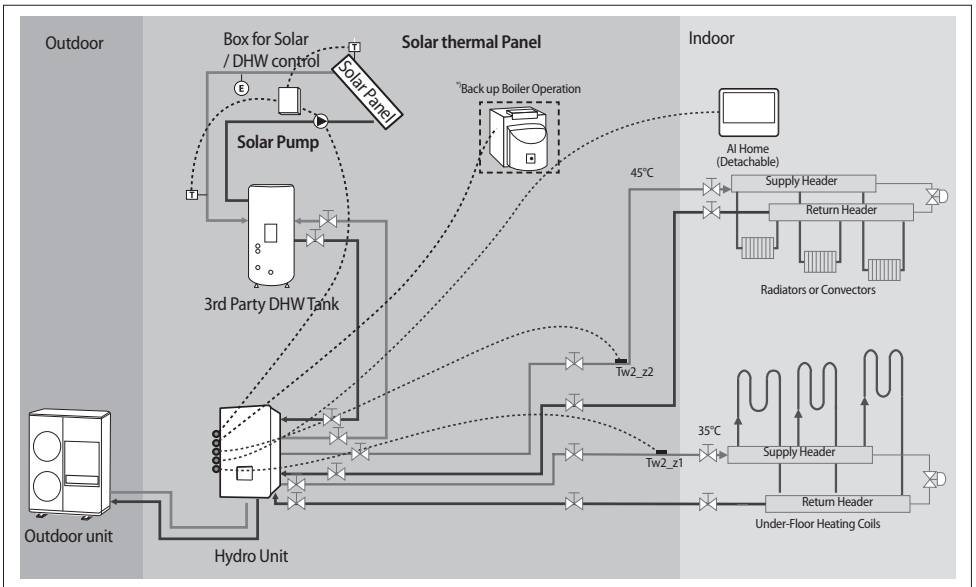

*) We control only the on / off signal of backup boiler according to outdoor temperature.
Backup boiler should be installed with own device according to the field condition.

CAUTION
- Samsung has not responsible for performance and stability of backup boiler.
- Water quality must be according to Directive (EU) 2020/2184.

4. Installation

Indoor unit

Hydro Unit

Pipe work

Water pipe work

The hydro unit is equipped with components listed on the table below.

All entering, leaving water direction is embossed right next to the pipe. Please connect the pipe with attention to the direction of the arrow

Whole water plumbing system including Hydro unit shall be installed by a qualified technician and must comply with all relevant European and national regulations.

- ▶ Allowable water pressure of hydro unit is maximum 3.0bar.
- ▶ An air-vent valve is integrated on the hydro unit. Please check that air-vent valve is not overtightened so the air-vent valve can release any air out of the system during system operation.
- ▶ AE160DNZ*** (2zone built-in type) is designed to supply water at 2 different temperatures
  - For heating operations, please connect the Zone1 supply line to a room that requires a lower water temperature (ex,underfloor heating) and the Zone2 supply line to a room that requires a higher water temperature (ex,radiators).

NOTE

If you install AE160DNZ*** (2zone built-in type) as a single-zone application, then:

- Install a bypass pipe between the water inlet and outlet for Zone 1 and use Zone 2 for space heating.
- Change FSV Setting #4061=0(Zone control= No), #4041=0 (Mixing V/Vcontrol= No)

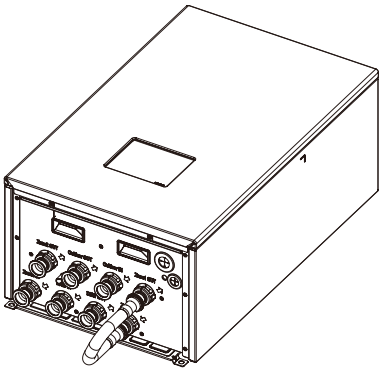

NOTE

If you install AE160DN**** with no 3rd party tank then:

- Install a bypass pipe between the water inlet and outlet for DHW.
- Please check FSV Setting #3011=0(DHW= No)

✻ AE160DNYMPK

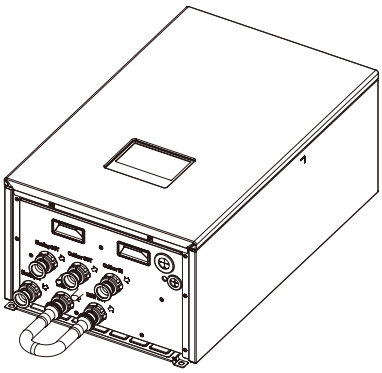

✻ AE160DNZMPK

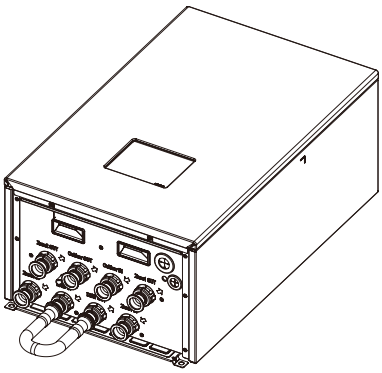

4. Installation

Indoor unit

Hydro Unit

ESP(External Static Pressure) Diagram

The illustration below shows the external static pressure of the unit depending on the water flow and the pump setting.

AE160DNY***

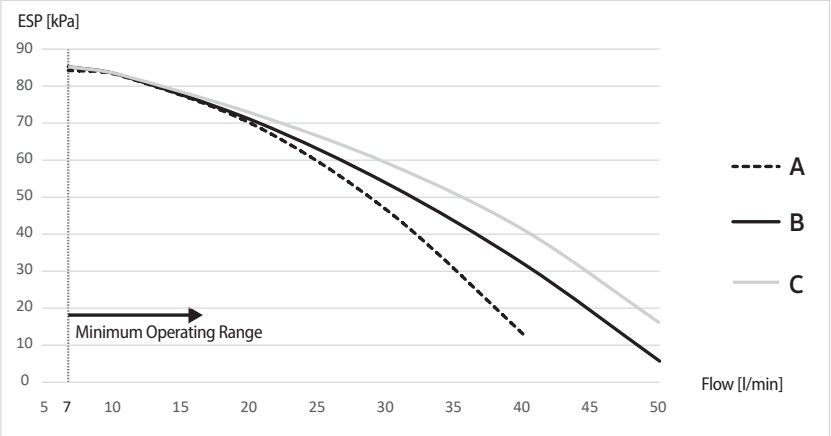

AE160DNZ***

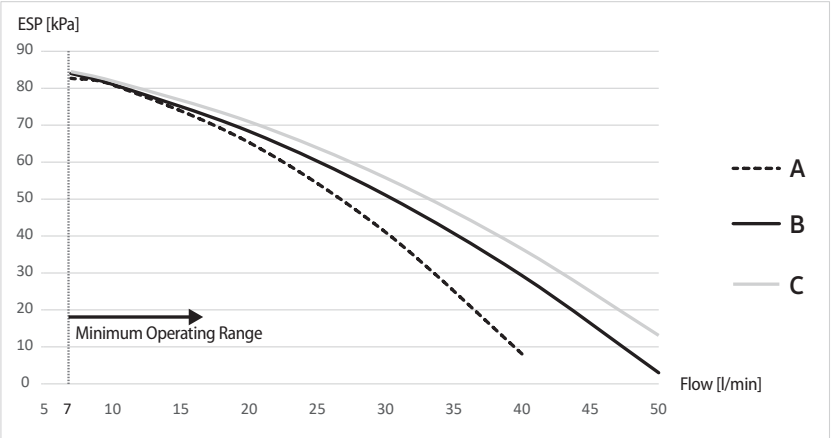

When ESP is not enough, additional pump should be installed. In this case, install the PWM control external type pump (Heating type) additionally.

*A: AE050(080)RXYD*G, AE050(080)CXYD*K

*B: AE120(160)RXYD*G, AE080BXYD*G, AE120(160)CXYD*K

*C: AE120(140)BXYD*G

Connection guide of additional pump

Ensuring proper water flow is an important factor for performance and efficiency.

If the water flow is not adequate, consider installing additional pumps.

When installing an additional pump, the system's maximum allowable water flow rate and maximum water pressure should not be exceeded.

CAUTION

- Each terminal set (Live+Neutral) for additional pumps can supply ampere up to Max 1.0A.
- If an additional pump is needed, the additional pump should be installed in a designated location according to the installation case below
- [Case I] AE160DNZ*** without connection to DHW tank : additional pump should be installed in the Zone2 piping line
- [Case II] AE160DNZ*** with connection to DHW tank : additional pump should be installed in the Zone2 piping line
- [Case III] AE160DNY*** without connection to DHW tank : additional pump should be installed in the piping lines of Zone or outdoor unit
- [Case IV] AE160DNY*** with connection to DHW tank : additional pump should be installed in the Zone piping line
- For installation cases I to IV, refer to wire works cases 1 and 2.
- If an additional pump is needed for Zone1 in AE160DNZ***, refer to wire works case 3.
- The maximum number of pumps that can be powered by the terminal block of the hydro unit is two. Therefore, if necessary, be sure to connect pumps other than the two to a separate power source.
- Ex) AE160DNZ*** already has 2 pumps (Inverter and fixed pump). In this case, all additional pumps should be connected to a separate power source. For AE160DNY*** including only one main pump, one additional pumps can be driven by the terminal block of the hydro unit without using a separate power source.

4. Installation

Indoor unit

Hydro Unit

Case 1) AC pump

The terminal set (B8+B7) can supply ampere up to Max 1.0A.

1. Power supply (Pump)

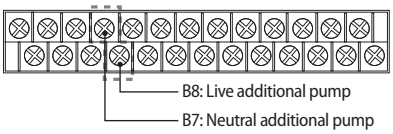

2. If the maximum output of the pump exceeds 1A, please connect it to a separate power source.

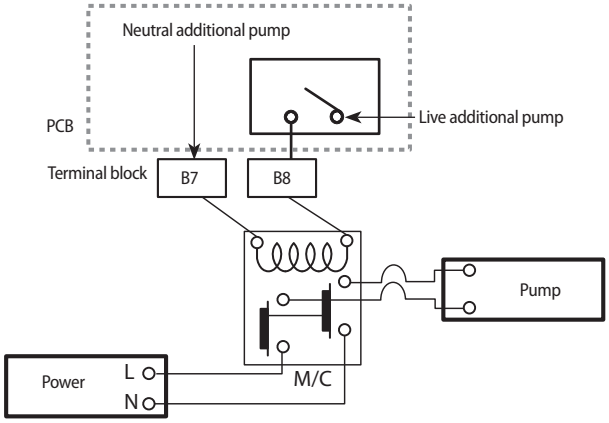

CAUTION
- The maximum allowable current that this terminal block can supply for the additional water pump is 1.0A.

Case 2) Inverter pump

Power supply connection is the same as the case1) AC pump

PWM characteristic curve

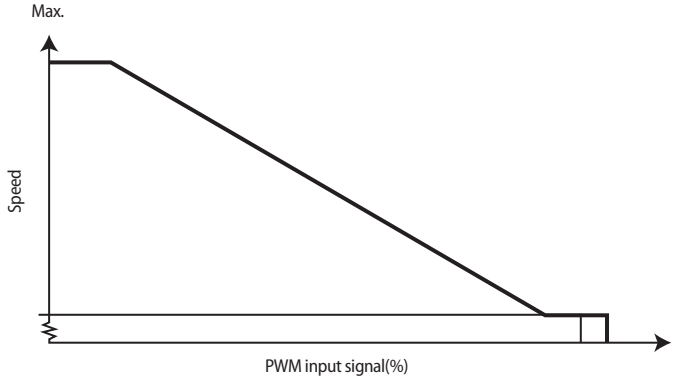

The additional pump should be the same type of product as the above graph.
Recommendation
Connect the PWM control line to the main control PBA output(CNS002) signal function for PWM control.
(Note: Wiring diagram)

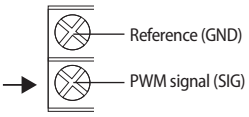

GRUNDFOS UPMM 25-95 (Heating Type), SHINHOO GPA25-9H (Heating Type)

CAUTION
- If there is wrong wiring between PWM and reference, INV. Water Pump may not work or wrong operation.

4. Installation

Indoor unit

Hydro Unit

Case3) Additional pump for Zone 1 in AE160DNZ***

Only AC pump can be used as an additional pump for Zone 1 in AE160DNZ***. The pump should be installed in piping line of Zone1 and connected to a separate power source as figure shown below.

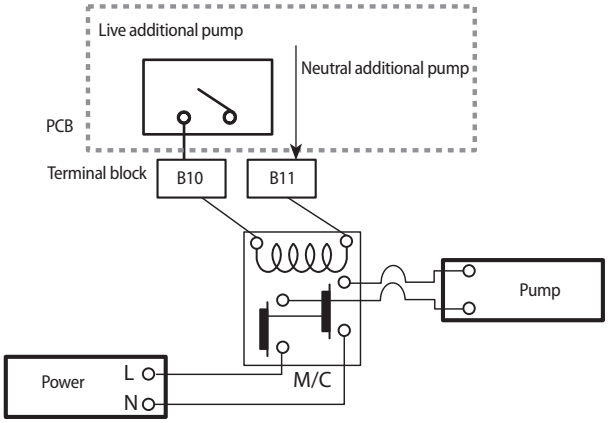

Wiring work

Connection of the power supply and communication cable

Model	Description		No. of Wires	Max. A	Thickness	Supply Scope
AE160DN*MPK	Main Power (1phase)		2 + ground	5 A	1.5mm² ↑ H05RN-F or H07RN-F	Field Supply (220-240Vac, Input)
	Heater Power	3phase Heater	4 + ground	8.7 A	2.5mm² ↑ H05RN-F or H07RN-F	Field Supply (380-415Vac, Input)
		1phase Heater	2 + ground	18.4 A	4.0mm² ↑ H05RN-F or H07RN-F	Field Supply (220-240Vac, Input)
	Communication		2	0.1 A	0.75mm² ↑ H05RN-F or H07RN-F	Field Wiring (~12Vdc, Data)

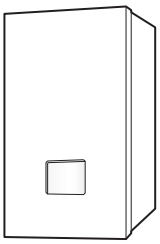

Communication cable connection

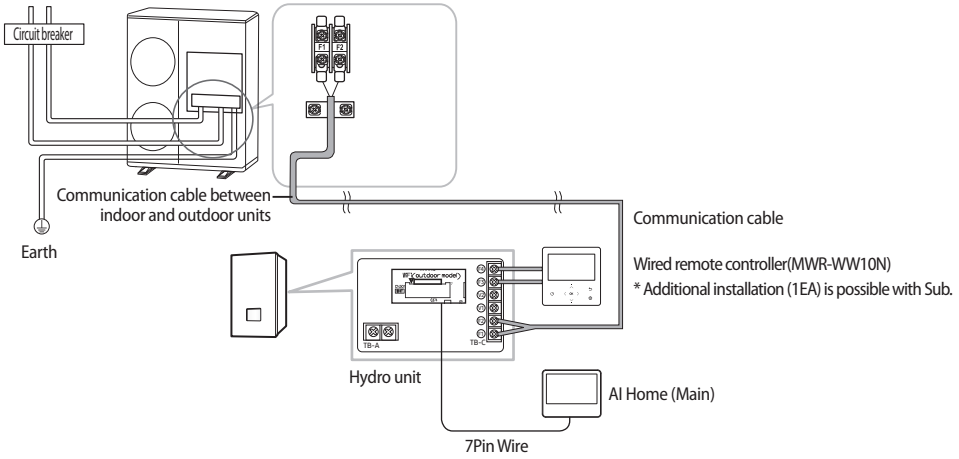

4. Installation

Indoor unit

Hydro Unit

CAUTION

- Main and heater power must be configured through each ELCB or MCCB + ELB.
- Backup heater should use the right power according to the power of the outdoor unit.

1. 1 phase product

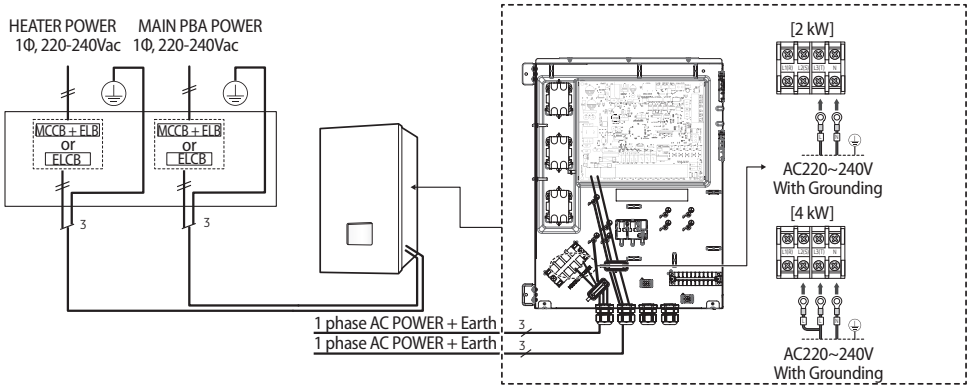

2. 3 phase product

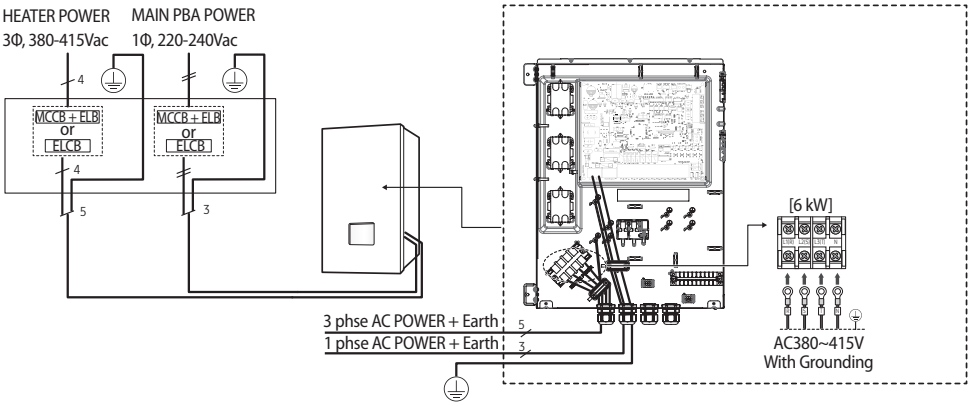

CAUTION

- **Circuit Breaker (ELCB or MCCB + ELB) for outdoor and indoor units shall be installed by installers because they are not sub-parts in the units.**
- If the supply cable is damaged, it must be replaced by a special cable or assembly available from the manufacturer or installer.
- It cause damage to chassis, PCB parts if the main power is not connected correctly. You should make certain that R, S, T is connected correctly before turning on the main power. (3 phase models only)

❋ ELCB : Earth leakage circuit breaker
ELB : Earth leakage breaker
MCCB : Molded case circuit breaker

4. Installation

Indoor unit

Hydro Unit

Two thermostat control

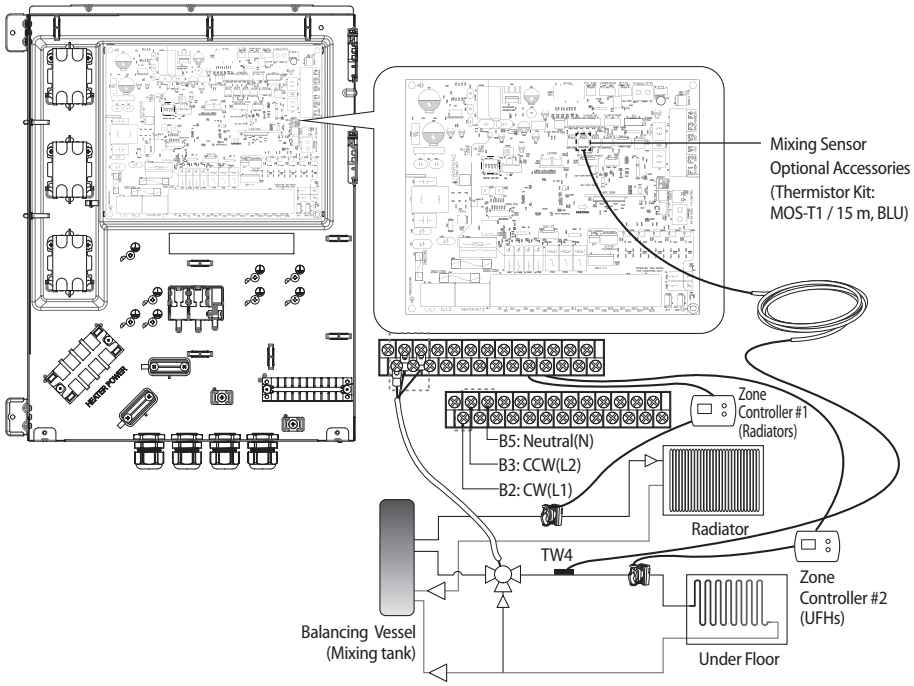

1. Before the installation, hydro unit should be turned off.
2. Using the appropriate equipment to correct position on the terminal block as shown on the diagram.
3. Install the supplied Mixing temperature sensor (TW4) on the mixed water side within 1 m from the Mixing Valve, as shown in the figure above.
4. Set the FSV value #4041~ #4046. Please refer to the controller manual for this setting.


CAUTION

- When using Zone control (FSV 4061 =1), Ignore Thermostat signal.

4. Installation

Indoor unit

Hydro Unit

2 Zone Control [FSV #4061 =1]

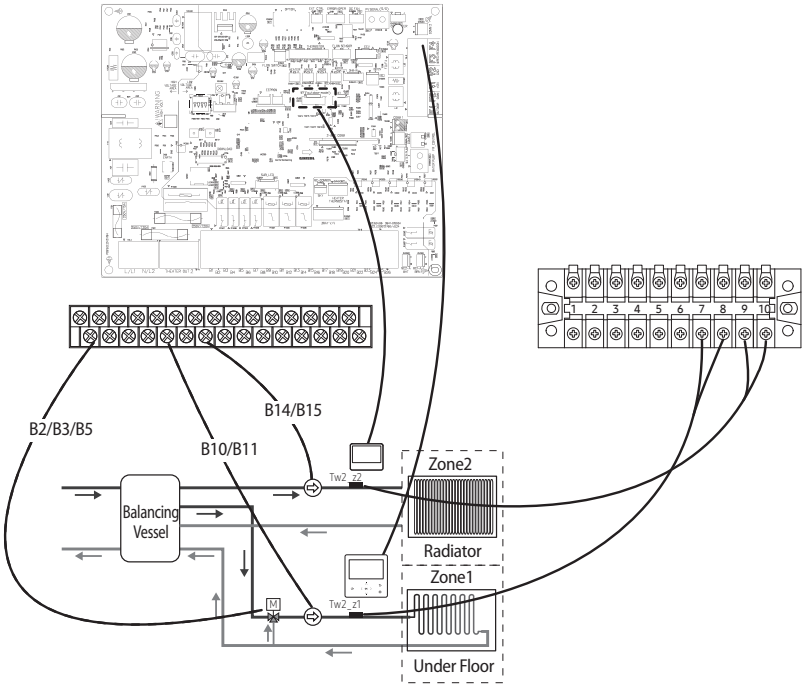

You can operate the 2 Zone control using a mixing value, water-out temperature sensors, and built-in or external room temperature sensors installed in a wired remote controller.
When both zones are simultaneously Thermo on, the operation is performed based on Zone2. Therefore, set the zone that you want to have the higher set temperature to Zone2.
(The mixing valve must be installed in the zone that you want to have the lower set temperature.)

1. Install the mixing valve. (See "Installation of mixing valve.")
2. Install the water-out temperature sensors (Tw2_z1, Tw2_z2) for all zones.
3. Unlike the zone control with a thermostat, connect the water pump signal lines to the product.

▶ Zone1 water pump connection: B10 (L1) + B11 (N)
▶ Zone2 water pump connection: B14 (L1) + B15 (N)

4. FSV 4061 = 1: Enable the 2 Zone control using the wired remote controller.

* f you want to operate the 2 Zone control by using water-out temperatures, you have only to complete steps 1 to 4 above.
* If you want to operate the 2 Zone control by using room temperatures and built-in temperature sensors in wired remote controllers, you must install two wired remote controllers in each room.
(If you use external room temperature sensors, you can control each room temperature with only one wired remote controller.)

Select a mixing valve from the manufacturers as below (recommended)

Maker		BELIMO	SIEMENS	HONEYWELL
Model code	3 Way Valve	R3020-6P3-S2	VXP45.20-4 (kvs 4)	V5011E1213
	Actuator	LR230A(-S)	SSB31	ML6420A3015
Running time		90 sec.	150 sec.	60 sec.
FSV(#4046) setting		9	15	6

4. Installation

Indoor unit

Hydro Unit

Connection of the 3-way valve

Description	No. of wires	Max. current	Thickness	Supply Scope
Diverting type 3way valve	4	50 mA	> 0.75 mm², H05RN-F or H07RN-F	Field supply (220-240V~, Output)

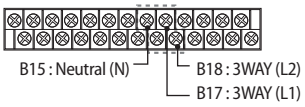

Status	L1	L2
A (Initial)	OFF	ON
B	ON	OFF

3-way diverting valve for water tank

- ▶ When cooling operating mode, floor heating loops will be closed.
- ▶ 220-240V~

1. Before the installation, hydro unit should be turned off.
2. Using the appropriate equipment to correct position of terminal block as shown on the diagram.
3. Make sure what type of 3 way V/V you use.

Field Setting Valve (#3071) "0" Floor heating as default	Field Setting Valve (#3071) "1" DHW tank as default
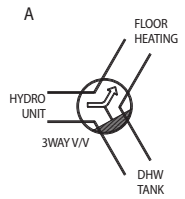	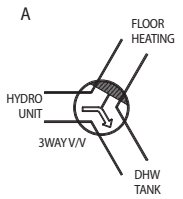
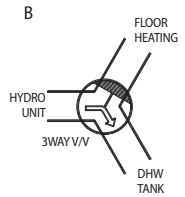	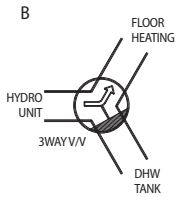

Connection of the back-up boiler

- ▶ This function is to determine which heating source can/will provide the space heating, either the heat pump system or the back-up boiler.
- ▶ To control the back-up boiler , configure FSV #4031~ #4033. Please refer to the controller manual for this setting.

Description	No. of wires	Max. current	Thickness	Supply Scope
Back-up Boiler	2+ground	50 mA	0.75mm² H05RN-F or H07RN-F	Field supply (220-240V~, Output)

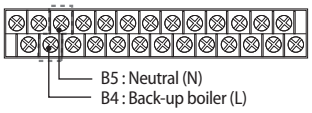

When it set back up boiler on the hydro unit (relay off)

When it order to back up boiler operates (relay on)

1. Before the installation, hydro unit should be turned off.
2. Using the appropriate equipment to correct position of terminal block as shown on the diagram.

❋ Heat pump does not work when the Back-up boiler operates.

4. Installation

Indoor unit

Hydro Unit

Connection of the external back-up heater

Description	No. of wires	Max. current	Thickness	Supply Scope
Back-up Heater	2+ground	1A	0.75mm^2 H05RN-F or H07RN-F	Field supply (220-240V~, Output)

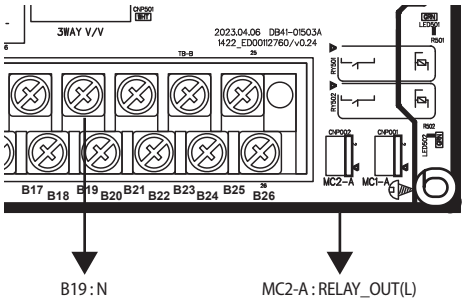

▶ If you need an additional heater, it can be installed as an option.

NOTE
- AE160DNZ*** (2 Zone built-in type) is strictly prohibited from installing external back-up heaters.
- An additional back-up heater for AE160DNY*** should be installed on the Zone piping line.

WARNING
- Please make sure to use the heater supplied by "Samsung", and a temperature sensor will also be added.

Connection of the Peak Power Control or PV control(Photovoltaics control)

Description	No. of wires	Max. current	Thickness	Supply Scope
Peak Power Control or PV control (Photovoltaics control)	2	-	-	Field supply

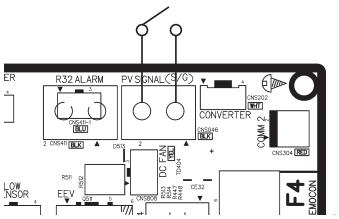

❋ Peak Power Control

▶ This is a function that allows you to disable the booster heater, backup heater, and compressor operation of the outdoor unit depending on the power input contact.

▶ If users make contracts with local electric power company for limiting the amount of power consumption when a surge in power usage, users can set FSV of "Forced off".

▶ To control the Power Peak , configure FSV #5041~ #5043. Please refer to the controller manual for this setting.

❋ PV control(Photovoltaics control)

▶ This is for energy saving by using the solar energy. (However, Power peak control can not be used at the same time.)

▶ To control PV, configure FSV #5081~ #5083. Please refer to the controller manual for this setting.

NOTE
- Except for domestic hot water mode, This function is activated only for the outing mode.

4. Installation

Indoor unit

Hydro Unit

Connection of the FR Control(Frequency ratio control)

Description	No. of wires	Max. current	Thickness	Supply Scope
FR Control	2	-	-	Field supply

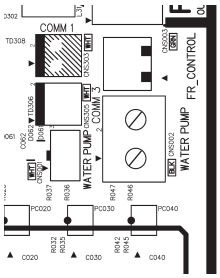

- ▶ This is to limit the maximum frequency of the outdoor unit compressor. (if FSV #5051 = 1 "use")
- ▶ Method 1 : External DC signal Control uses a DC voltage of 0 ~ 10V (0v = 50%, ~ 10v = 150%)
- ▶ Method 2 : Demand ratio (DR) control through Modbus communication

Connection of the Solar Pump / DHW thermostat

Description	No. of wires	Max. current	Thickness	Supply Scope
Solar pump / DHW Thermostat	2+ground	22mA	0.75mm² H05RN-F or H07RN-F	Field supply (220-240V~, Input)

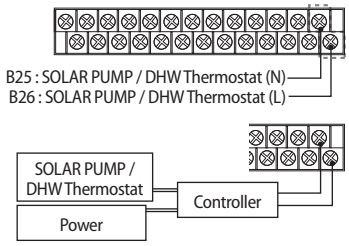

1. Before connecting the external control kit, make sure it is turned off.
2. Using the appropriate equipment to correct position of terminal block as shown on the diagram.
3. The external control kit must provide an output signal when Solar pump/ DHW Thermostat is operating.
4. It is the installers responsibility to connect the output of the control kit to the Solar Pump/ DHW Thermostat input terminal (B25-26). In operating mode, signal shall be around 230VAC (N-L). In non-operating mode, signal shall be around 0VAC (N-L).

When solar pump signal is On, Hydro unit DHW mode will be turned off.

If a solar pump for DHW is used, the signal input line from the solar pump can be connected as shown above

- ▶ if a solar pump is used, FSV#3061 should be set to 1

If DHW thermostat is used, the signal input line from the DHW thermostat can be connected as shown above

- ▶ if DHW thermostat is used, FSV#3061 should be set to 2

NOTE

- Solar pump and DHW thermostat cannot be used simultaneously

4. Installation

Indoor unit

Hydro Unit

Connecting for smart grid ready control

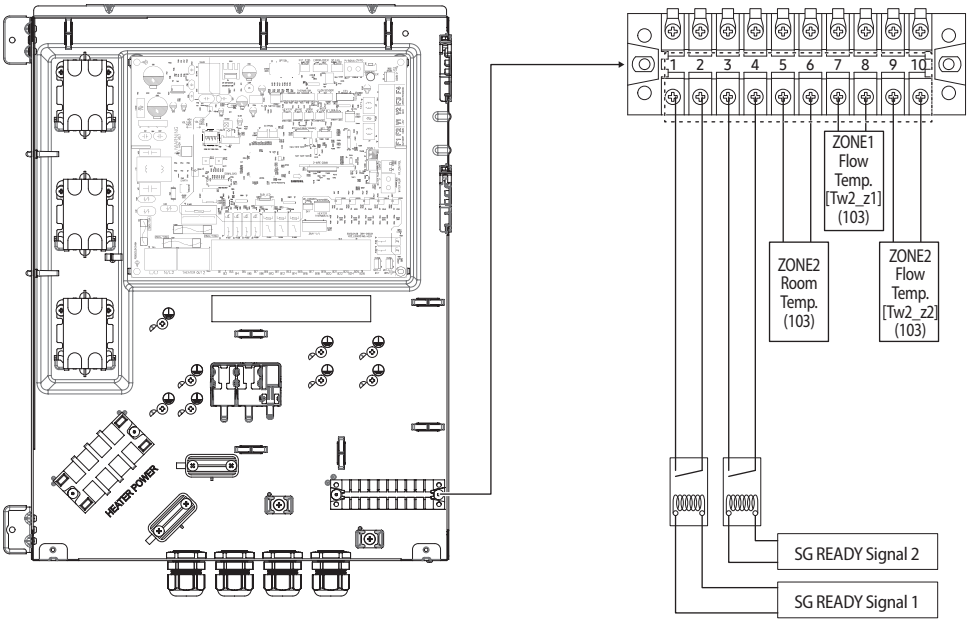

SG READY Signal 1	SG READY Signal 2	Product operation
Short	Open	Forced thermo off operation
Open	Open	Normal operation
Open	Short	Heating / DHW setting temperature 1step-up operation
Short	Short	Heating / DHW setting temperature 2step-up operation

CAUTION
- These parts are optional and not included with the product.
- Maker sure to connect to non-power on/off contacts.

2025.05
Ver.1.2

Samsung Electronics Co., LTD.
Head Office (Suwon Korea) 129, Samsung-Ro, Yeongtong-Gu, Suwon City, Gyeonggi-Do, Korea 16677
Website : www.samsung.com, https://partnerhub.samsung.com Email : airconditioner@samsung.com