SAMSUNG

Air to Water Heating

Eco Heating System (EHS)

Are you still using a gas or fuel oil heating system?

An eco-friendly heating system that considers above all the earth's health. If you are still using a gas or fuel oil heating system, now you have the possibility to get a much higher efficiency, to save space and, much more important, to protect the environment by replacing it with an EHS System by Samsung. Thanks to this system you can heat your (new or renovated) house in a more efficient way by saving energy and money as well as the space occupied by the heating system.

It will be no longer necessary to install an air conditioning system too because EHS system offers everything you need throughout the year. Enjoy your life thanks to this technology as innovative as it is convenient!

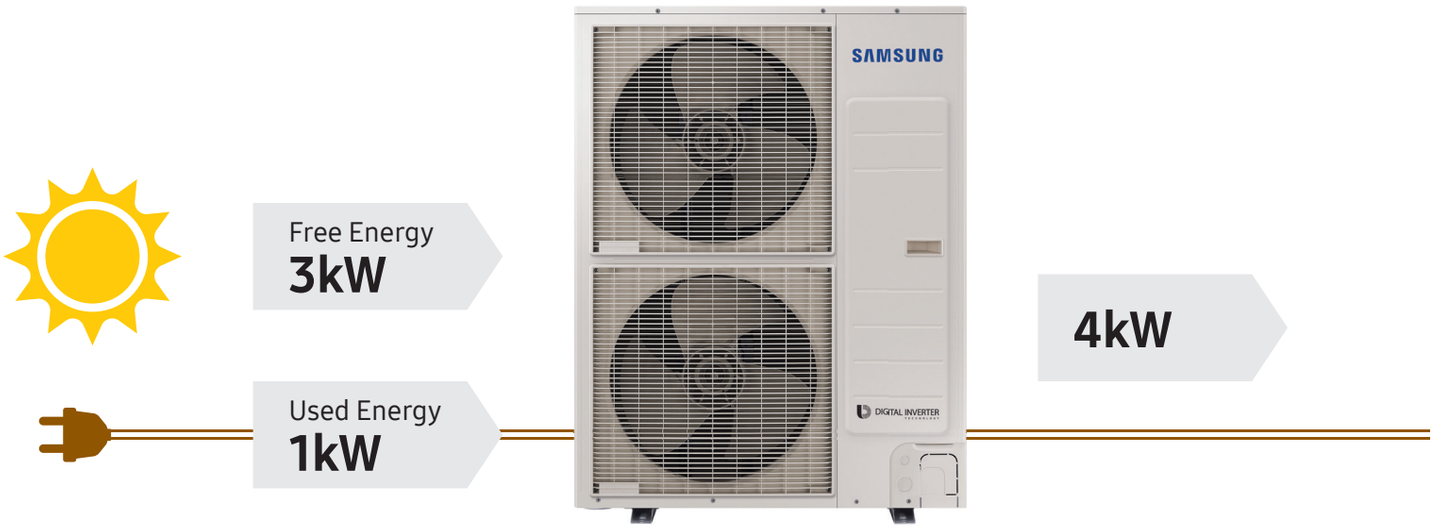

Which are the advantages?

The usage of a heat pump system to heat the house and produce domestic hot water is a particularly efficient and eco-friendly solution. The main advantage resulting from such efficiency is a relevant reduction in energy absorption and thus in operating costs. EU has definitively classified the heat pump system among the “renewable energy” products. Thanks to this classification, end users can enjoy special tax benefits in compliance with the provisions of the local authorities. Your installer could give you more information about tax benefits.

What’s a heat pump?

A heat pump is a high-efficient energy system for domestic heating and domestic hot water production. The usage of a heat pump system to heat the house and produce domestic hot water is a very efficient and eco-friendly solution.

How does it work?

In order to make available a higher quantity of thermal energy in the radiant panel system, a heat pump needs less primary energy than a traditional heating system. Actually for each kWh of primary energy absorbed, a heat pump is able to make available more than 4kWh of useful energy with a Coefficient of Performance (COP) above 400%. The performance of a good heating system can reach instead 95%. All this means that, contrary to heat pump, the heating systems use more energy than the energy they make available as heat.

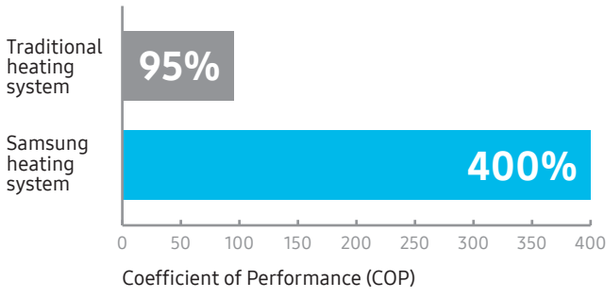

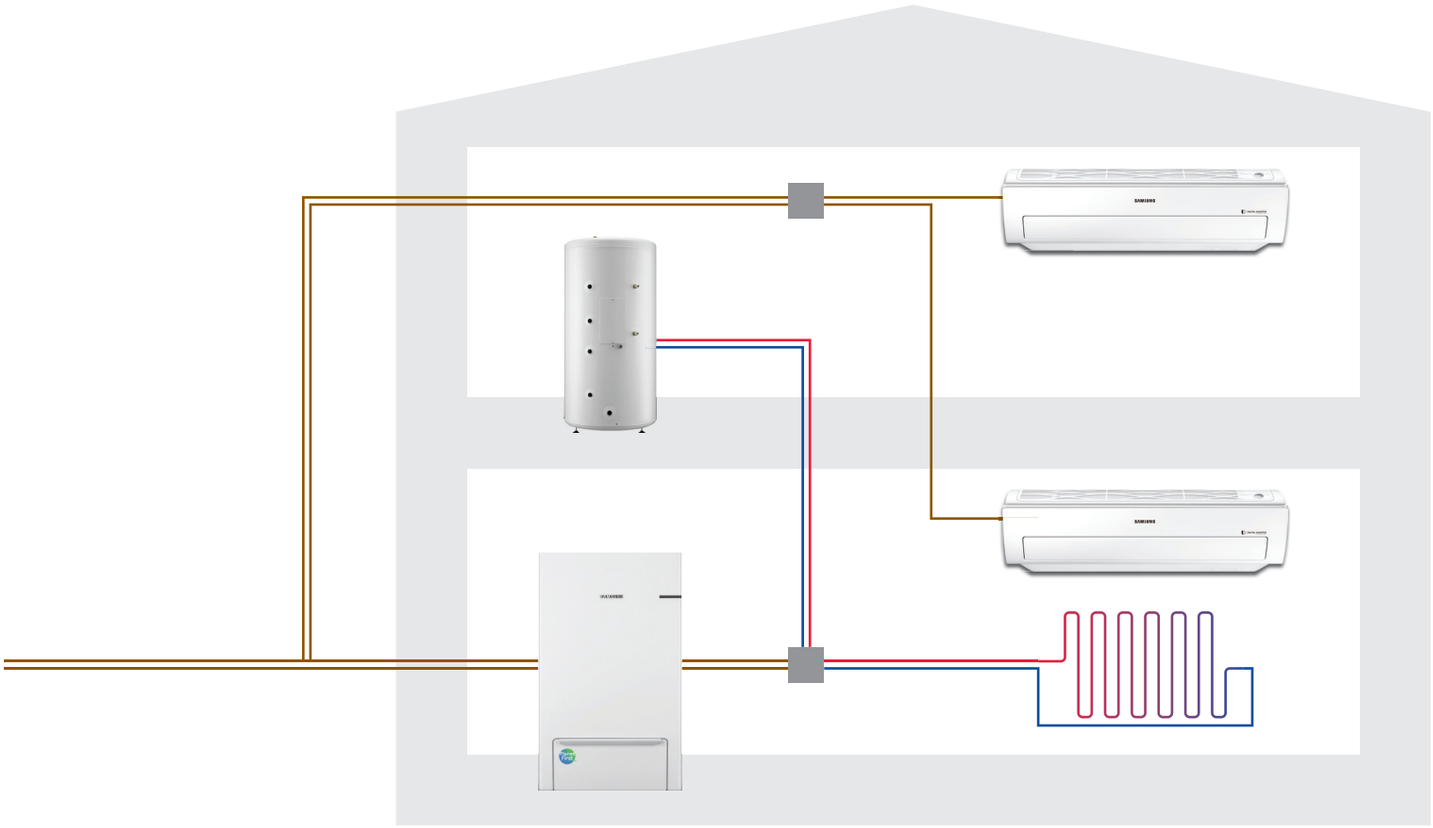

DOMESTIC HOT WATER STORAGE TANK

(not provided by Samsung)
It stores and supplies the domestic hot water produced by the system.

UNDERFLOOR HEATING PANELS AND RADIATORS

(not provided by Samsung)
They heat the house and make it pleasant to live in.

Overview of the EHS TDM PLUS system

The EHS TDM Plus system is an “All-In-One” system that uses a high-efficient heat pump technology for domestic heating in winter by keeping the temperature at an optimal level throughout the year with very limited operating costs both in cooling and heating modes! Therefore, it is a very economical and compatible system that not only limits operating costs and CO2 emission but also offers different solutions with regard to air-conditioning and heating of the house, and domestic hot water. Moreover, it is able to meet the very different users’ needs throughout the year.

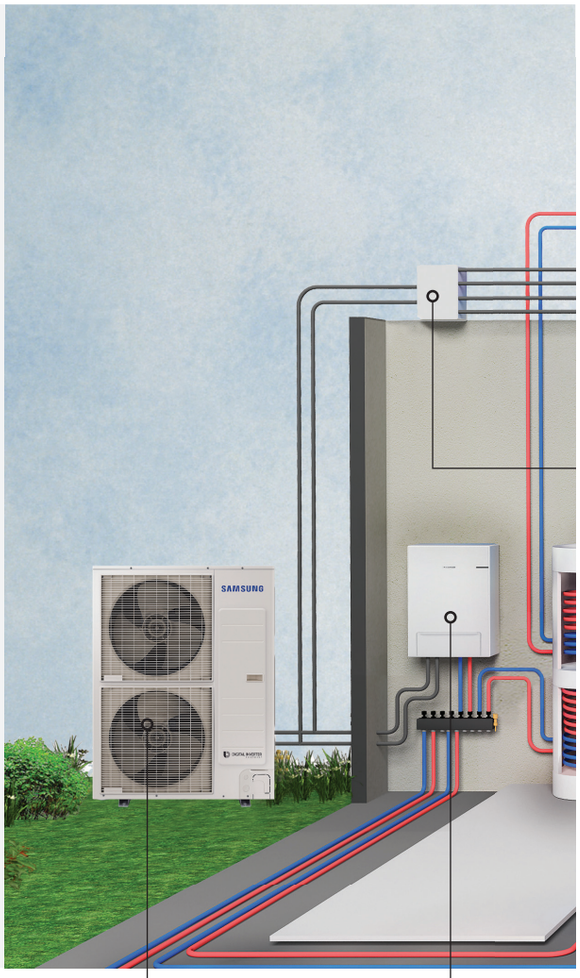

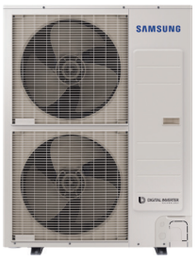

OUTDOOR UNIT

It transfers the outdoor air heat to the house during the winter while in summer it disperses the indoor heat in the outdoor air.

HYDRO UNIT

Heat exchanger for hot water production.

THERMOSTATIC MIXER FOR DOMESTIC HOT WATER

(not provided by Samsung)

It ensures a supply of hot water with a constant temperature.

SOLAR PANELS

(not provided by Samsung)

They can provide up to 70% of the heat required to produce domestic hot water by using solar energy.

AMBIENT THERMOSTAT

(not provided by Samsung)

It automatically adjusts the room temperature according to the set temperature.

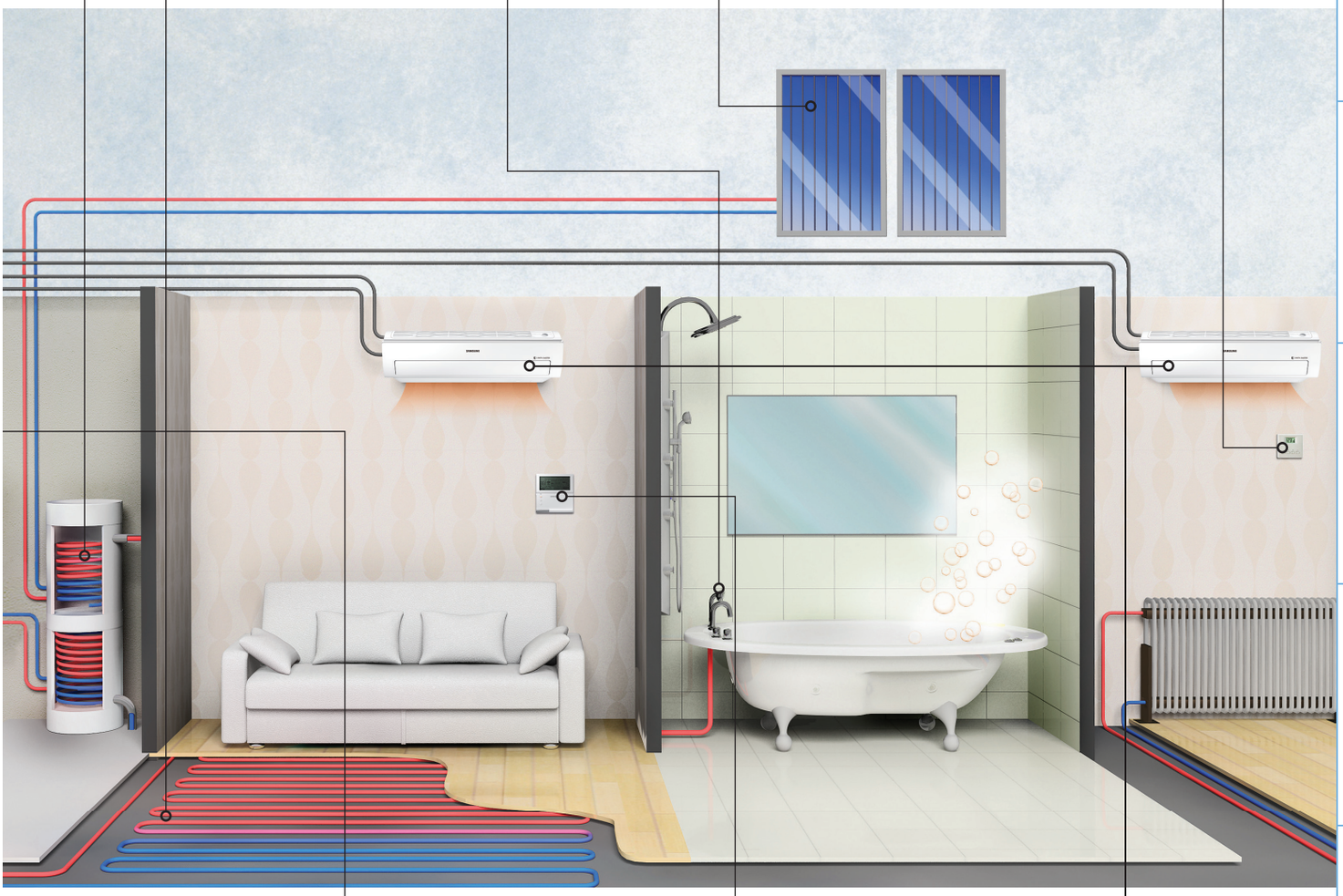

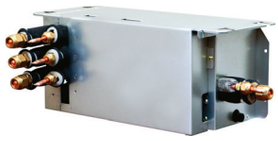

EEV KIT

The EEV (Electronic Expansion Valve) Kit checks the liquid refrigerant flow. (Only for wall-mounted indoor units)

CONTROL PANEL

Multi-functional control panel to manage the hydronic part (it can also be remotely operated).

DIRECT EXPANSION INDOOR UNITS

Wall-mounted, ducted or console models.

Line-up

Model Type		EHS MONO		EHS SPLIT		EHS TDM Plus	
		1 Phase	3 Phase	1 Phase	3 Phase	1 Phase	3 Phase
Outdoor units	Power Supply Capacity	220-240V 50Hz	380-415V 50Hz	220-240V 50Hz	380-415V 50Hz	220-240V 50Hz	380-415V 50Hz
	4.0 kW			●		●	
	5.0 kW	●					
	6.0 kW			●		●	
	7.0 kW					●	
	8.0 kW						
	9.0 kW	●	●	●	●	●	●
	10.0 kW						
	11.0 kW						
	12.0 kW	●	●	●	●	●	●
	14.0 kW	●	●	●	●		
	16.0 kW	●	●	●	●	●	●
Hydro kit	4-9 kW			●	●	●	
	11-16 kW			●	●	●	
Domestic Hot Water Storage Tank	Std. 200L	●	●	●	●	●	●
	Solar 300L	●	●	●	●	●	●
Remote Controller Kit		●	●				
Indoor units	Model					Wall-mounted / Slim Duct / MSP Duct / Console	
	2.2 kW					● / ● /	●
	2.8 kW					● / ● /	●
	3.6 kW					● / ● /	●
	4.5 kW					/ ● /	
	5.6 kW					● / ● /	●
	7.1 kW					● / / ●	●
	9.0 kW					/ / ●	
Description		• Air-water system with exchanger integrated in the outdoor unit • Installation flexibility • Management of the indoor and outdoor systems through the Wi-Fi application		• Air-water system including an outdoor unit and an hydronic system • Integrated circulation pump • Installation flexibility • Management of the indoor and outdoor system through the Wi-Fi application		• Integrated system for heating/cooling and hot water production • Integrated circulation pump • Installation flexibility • Ductable and connectable with wall-mounted and console indoor units • Unified control solution (NASA, Wi-Fi Kit) • Emergency Operation • Higher efficiency (EER 3.61 / COP 4.05)	

Product Features

EHS Monobloc

Single outdoor unit for a simplified installation and an easy usage. EHS MONO has an outdoor unit including the hydronic system. It is not necessary to make space for the hydric kit installation and for the refrigerant piping.

- Water piping (supply)
- Water piping (intake)

Smart Wi-Fi
MIM-H03N

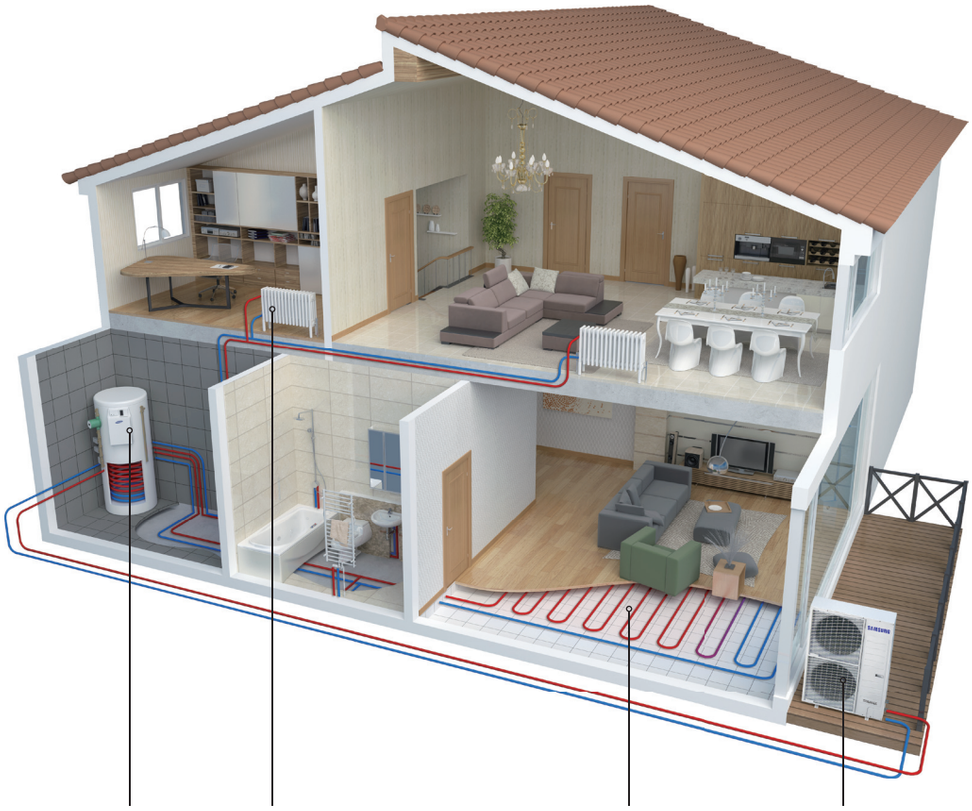

EHS Mono installation possibilities (Air-Water)

- Underfloor heating and domestic hot water production (A2W)
- Underfloor cooling (A2W)
- Chilled water production
- Compatibility with solar panels and possible back-up heating system

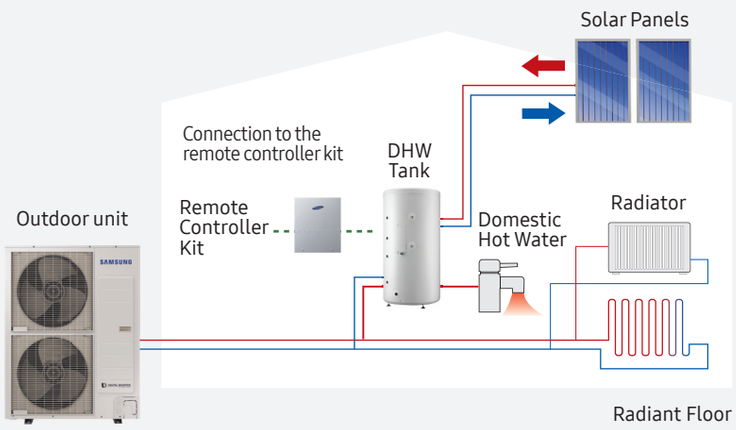

Control Kit & Wi-Fi Kit

Model Name		MIM-E03AN	MIM-E03BN
Power Supply		220~240V, 50Hz, 1Φ	220~240V, 50Hz, 1Φ
External Dimension	Net Weight	3,5	3,5
	Net Dimensions (WxHxD)	370x110x290	370x110x290
Flow Switch	Set Point (Min. flow rates)	16±1.5	7±1.5
External Control	Booster Heater	AC 230V (Max 20A)	AC 230V (Max 20A)
	Back up Heater (/Boiler)	AC 230V (Max 0.5A)	AC 230V (Max 0.5A)
	Water Pump	AC 230V (Max 2A)	AC 230V (Max 2A)
	2way(or 3way) Valve	AC 230V (Max 0.5A / 120W)	AC 230V (Max 0.5A / 120W)
	Room Thermostat	AC 230V (Max 10mA)	AC 230V (Max 10mA)
	Solar Pump	AC 230V (Max 10mA)	AC 230V (Max 10mA)
	Inverter Pump	AC 230V (Max 2A)	AC 230V (Max 2A)
	3way Mixing Valve	AC 230V (Max 0.5A / 120W)	AC 230V (Max 0.5A / 120W)

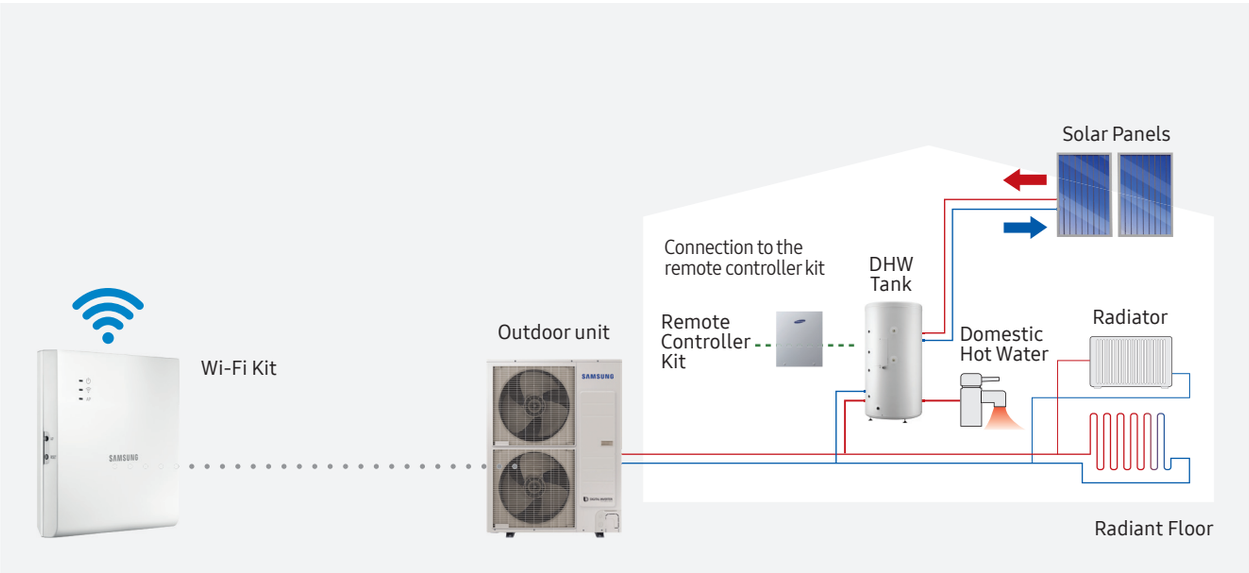

Specifications

EHS Monobloc

Model Name		Outdoor Unit			AE050JXYDEH/EU	AE090JXYDEH/EU	AE090JXYDGH/EU
Power Supply				Φ, V, Hz	1, 220-240, 50	1, 220-240, 50	3, 380-415, 50
System	Performance A7°C/W35°C	Nominal Capacity	Heating (Min/Max)	kW	1.667 / 5.00	2.20 / 9.00	2.20 / 9.00
			Cooling (Min/Max)	kW	1.625 / 5.00	1.75 / 7.50	1.75 / 7.00
		Power Input (Nominal)	Heating (Min/Max)	kW	0.348 / 1.06	0.49 / 2.14	0.49 / 2.14
			Cooling (Min/Max)		0.438 / 1.21	0.48 / 1.95	0.48 / 1.92
		Current Input (Nominal)	Heating (Min/Max)	A	1.6 / 5.1	2.3 / 9.2	0.8 / 3.5
			Cooling (Min/Max)		2.0 / 5.7	2.2 / 9.0	0.8 / 3.2
		COP (Nominal Heating)		-	4,72	4,21	4,21
		EER (Nominal Cooling)		-	4,13	3,85	3,65
		SCOP(35°C)		-	4,5	4,41	4,41
		ESEER		-	5,29	5,07	4,69
	Performance A2°C/W35°C	Capacity	Heating	W	4.500	7.000	7.000
		COP		-	3,46	3	3
	Performance A-7°C/W35°C	Capacity	Heating	W	4.700	7.600	7.600
		COP		-	2,69	2,39	2,39
	Field Wiring	Minimum Circuit		A	20	22	10
		Maximum Fuse		A	25	27,5	16,1
	Water Connections	Water Flow Rate (Heating/Cooling)		l/min	14.5/14.5	26/22	26/21
		Leaving Water Temperature	Heating	°C	25~55	25~55	25~55
			Cooling	°C	5~25	5~25	5~25
	Refrigerant	Type			R410A	R410A	R410A
		Factory Charging		g / tCO2e	1,150 / 2.40	1,400 / 2.92	1,500 / 3.13
Outdoor Unit	Compressor	Type			BLDC Twin Rotary	BLDC Twin Rotary	BLDC Twin Rotary
	Fan	Airflow Rate	Cooling	m^3/min	51	66	66
				l/s	850	1100	1100
	Sound	Sound Pressure (Heating/Cooling)		dB(A)	45/45	48/48	48/48
		Sound Power		dB	61/62	63/64	63/64
	External Dimension	Net Weight		kg	59	76	76
		Net Dimensions (WxHxD)		mm	880 x 798 x 310	940 x 998 x 330	940 x 998 x 330
	Operating Temp. Range	Heating		°C	-25~35	-25~35	-25~35
		Cooling		°C	10~46	10~46	10~46

AE120JXYDEH/EU	AE120JXYDGH/EU	AE140JXYDEH/EU	AE140JXYDGH/EU	AE160JXYDEH/EU	AE160JXYDGH/EU
1, 220-240, 50	3, 380-415, 50	1, 220-240, 50	3, 380-415, 50	1, 220-240, 50	3, 380-415, 50
3.75 / 12.00	3.75 / 12.00	3.75 / 14.00	3.75 / 14.00	3.75 / 16.00	3.75 / 16.00
3.30 / 12.00	3.30 / 12.00	3.30 / 13.00	3.30 / 13.00	3.30 / 14.00	3.30 / 14.00
0.809 / 2.66	0.809 / 2.66	0.809 / 3.14	0.809 / 3.14	0.809 / 3.80	0.809 / 3.80
0.853 / 3.16	0.853 / 3.16	0.853 / 3.50	0.853 / 3.50	0.853 / 3.84	0.853 / 3.84
3.7 / 12.0	1.3 / 4.2	3.7 / 14.3	1.3 / 4.8	3.7 / 17.1	1.3 / 5.7
3.9 / 14.3	1.3 / 5.2	3.9 / 15.7	1.3 / 5.3	3.9 / 17.3	1.3 / 5.8
4,51	4,51	4,46	4,46	4,21	4,21
3,8	3,8	3,71	3,71	3,65	3,65
4,46	4,46	4,43	4,43	4,41	4,41
4,98	4,98	4,97	4,97	4,92	4,92
9.800	9.800	11.200	11.200	12.500	12.500
3,32	3,32	3,26	3,26	3,1	3,1
10.300	10.300	10.800	10.800	13.400	13.400
2,61	2,61	2,56	2,56	2,47	2,47
28	10	30	12	32	12
35	16,1	37,5	16,1	40	16,1
35/35	35/35	40/37	40/37	46/40	46/40
25~55	25~55	25~55	25~55	25~55	25~55
5~25	5~25	5~25	5~25	5~25	5~25
R410A	R410A	R410A	R410A	R410A	R410A
2,600 / 5.43	2,600 / 5.43	2,600 / 5.43	2,600 / 5.43	2,600 / 5.43	2,600 / 5.43
BLDC Twin Rotary	BLDC Twin Rotary	BLDC Twin Rotary	BLDC Twin Rotary	BLDC Twin Rotary	BLDC Twin Rotary
99	99	108	108	118	118
1650	1650	1800	1800	1967	1967
50/50	50/50	51/52	51/52	52/54	52/54
64/65	64/65	65/66	65/66	66/69	66/69
108	108	108	108	108	108
940 x 1,420 x 330	940 x 1,420 x 330	940 x 1,420 x 330	940 x 1,420 x 330	940 x 1,420 x 330	940 x 1,420 x 330
-25~35	-25~35	-25~35	-25~35	-25~35	-25~35
10~46	10~46	10~46	10~46	10~46	10~46

Dimensional Drawings

EHS Monobloc

AE050JXYD*H/EU

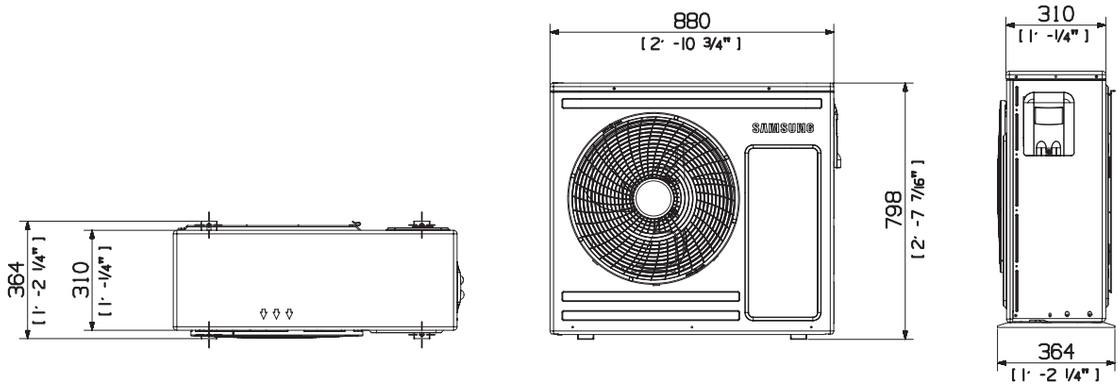

AE090JXYD*H/EU

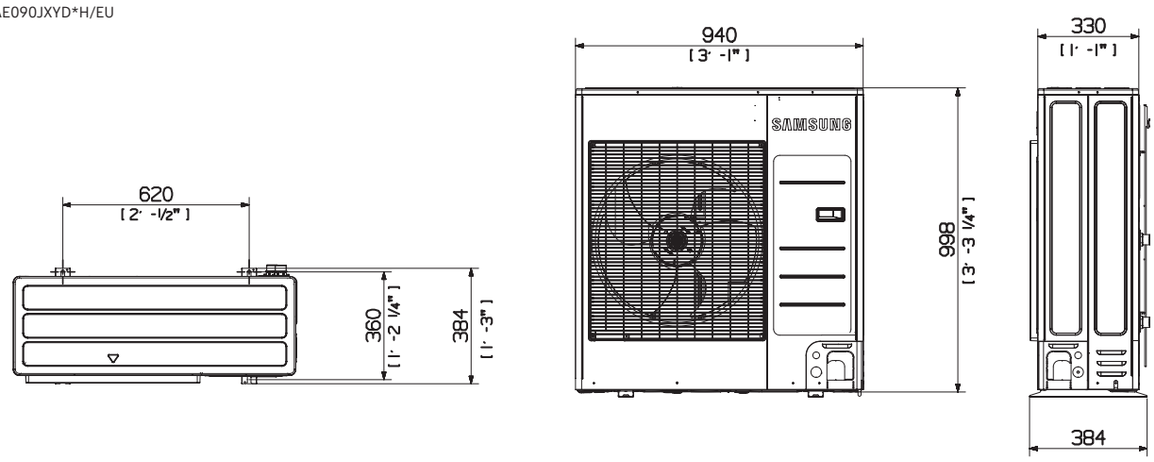

AE120/140/160JXYD*H/EU

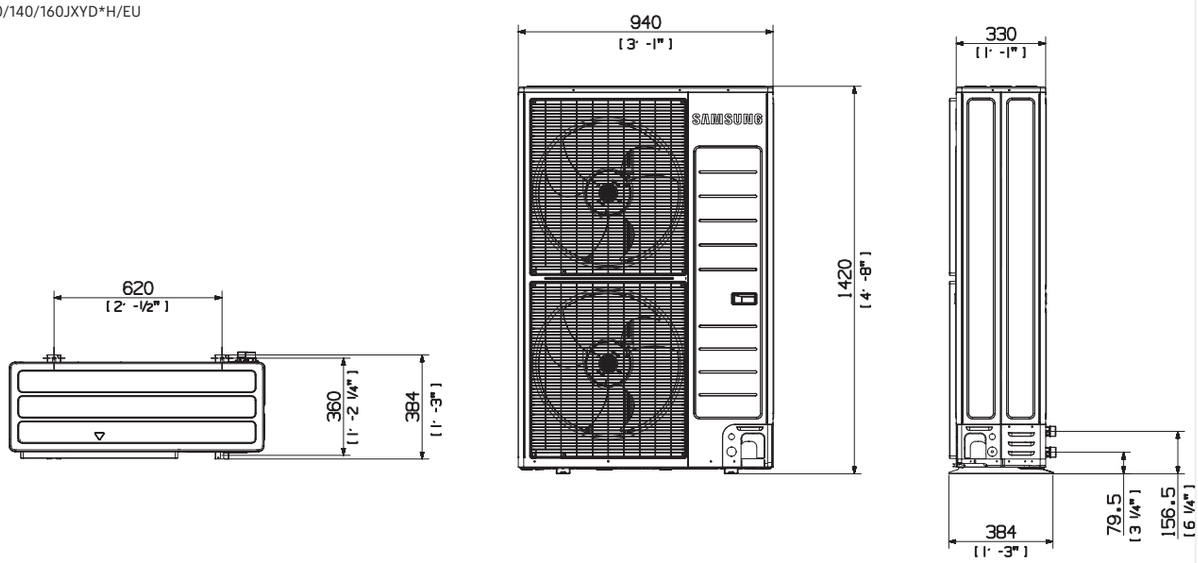

Control Kit & Wi-Fi Kit

MIM-E03A(B)N

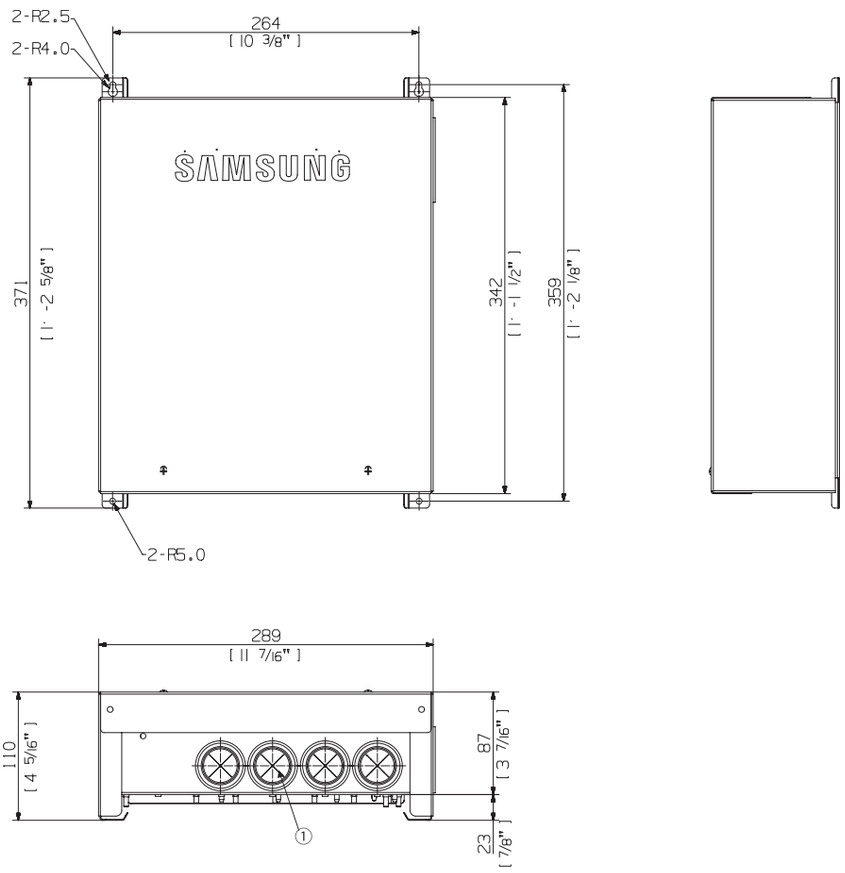

MIM-H03N (MIM-H03RN)*

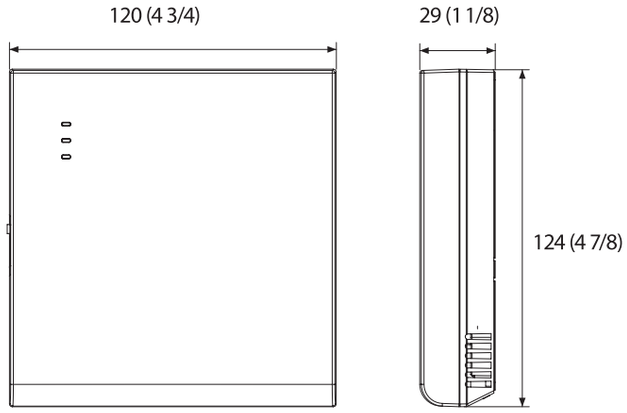

Product Features

EHS Split

Outdoor unit with separated hydric kit for all application requirements. By means of the hydric kit, EHS SPLIT enables to produce domestic hot water and underfloor heating/cooling, and to power radiators at low temperature.

- Refrigerant piping
- Water piping (supply)
- Water piping (intake)

Smart Wi-Fi
MIM-H03N

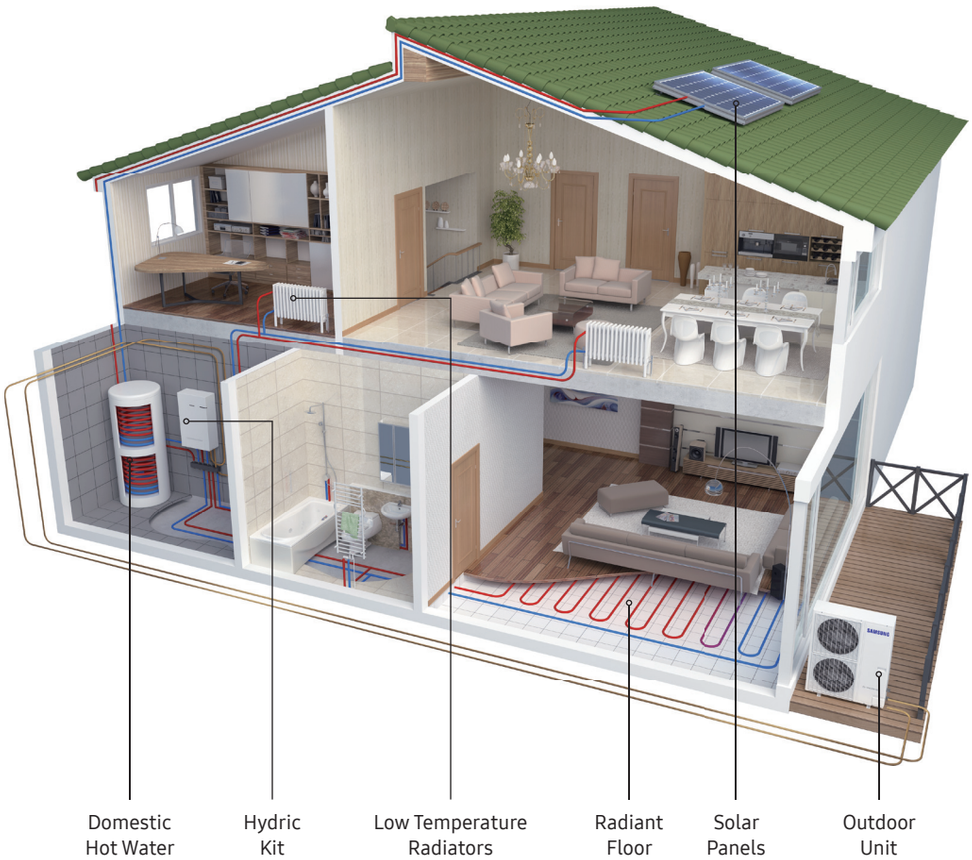

EHS Split installation possibility (Air-Water)

- Underfloor heating and domestic hot water production (A2W)
- Underfloor cooling (A2W)
- Composed of an outdoor unit, a hydric kit and a domestic
- hot water storage tank (optional)
- Compatibility with solar panels and possible back-up heating system

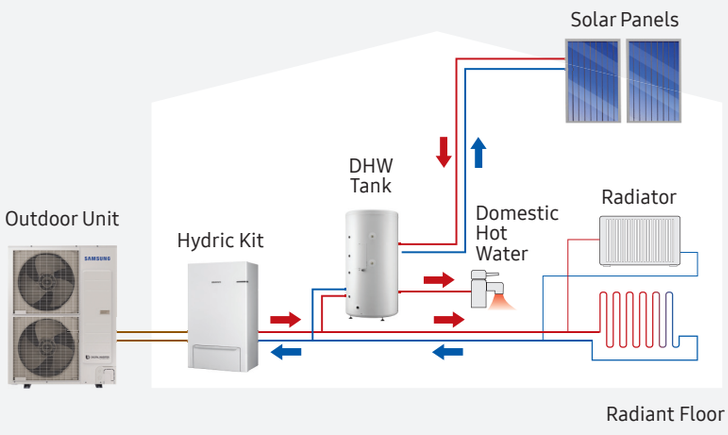

SAMSUNG
DIGITAL INVERTER
Windfree

Specifications

EHS Split

Model Name		Outdoor Unit			AE040JXEDEH/EU	AE060JXEDEH/EU	AE090JXEDEH/EU
		Hydro Unit			AE090JNYDEH/EU	AE090JNYDEH/EU	AE090JNYDEH/EU
Power Supply				Φ, V, Hz	1, 220-240, 50	1, 220-240, 50	1, 220-240, 50
System	Performance (A7°C/W35°C)	Nominal Capacity		kW	1.67 / 4.00	1.67 / 6.00	2.39 / 9.00
				kW	1.63 / 5.00	1.63 / 6.50	1.82 / 8.00
		Power Input (Nominal)		kW	0.35 / 0.86	0.35 / 1.25	0.54 / 2.01
					0.44 / 1.26	0.44 / 1.75	0.50 / 2.20
		Current Input (Nominal)		A	1.6 / 4.1	1.6 / 5.7	2.5 / 9.2
					2.0 / 5.7	2.0 / 8.0	2.3 / 10.1
		COP (Nominal Heating)		-	5,1	4,8	4,48
		EER (Nominal Cooling)		-	3,97	3,71	3,64
		SCOP(35°C)		-	4,44	4,43	4,45
		ESEER		-	5,37	5,35	4,79
	Performance A2°C/W35°C	Capacity	Heating	kW	3,4	4,6	7,7
		COP			3,52	3,31	3,38
	Performance A-7°C/W35°C	Capacity	Heating	kW	3,6	5,1	7,6
		COP			2,62	2,49	2,45
	Energy Efficiency Rating	Heating (35°C)		-	A++	A++	A++
		Heating (55°C)		-	A++	A++	A++
	Field Wiring	Minimum Circuit		A	20	20	22
		Maximum Fuse		A	25	25	27,5
	Water Connections	Water Flow Rate (Heating / Cooling)		l/min	13/15	17/20	26/25
		Leaving Water Temperature	Heating	°C	25~55	25~55	25~55
			Cooling	°C	5~25	5~25	5~25
	Refrigerant Connections	Liquid Pipe		Φ, mm (inch)	6.35 (1/4")	6.35 (1/4")	6.35 (1/4")
		Gas Pipe		Φ, mm (inch)	15.88 (5/8")	15.88 (5/8")	15.88 (5/8")
	Operating Temp. Range	Heating (A2W)		°C	-25~35	-25~35	-25~35
		Cooling (A2W)		°C	10~46	10~46	10~46
		DHW (A2W)		°C	-25~43	-25~43	-25~43
Outdoor Unit	Compressor	Type		-	BLDC Twin Rotary	BLDC Twin Rotary	BLDC Twin Rotary
	Sound	Sound Pressure (Heating/Cooling)		dB(A)	46/46	47/47	49/50
		Sound Power (Heating/Cooling)		dB(A)	61/63	61/63	64/63
	External Dimension	Net Weight		kg	48,5	48,5	68
		Net Dimensions (WxHxD)		mm	880 x 638 x 310	880 x 638 x 310	940 x 998 x 330
	Refrigerant	Type		-	R410A	R410A	R410A
		Factory Charging		g / tCO2e	1,400 / 2.92	1,400 / 2.92	1,700 / 3.55

AE090JXEDGH/EU	AE120JXEDEH/EU	AE120JXEDGH/EU	AE140JXEDEH/EU	AE140JXEDGH/EU	AE160JXEDEH/EU	AE160JXEDGH/EU
AE090JNYDGH/EU	AE160JNYDEH/EU	AE160JNYDGH/EU	AE160JNYDEH/EU	AE160JNYDGH/EU	AE160JNYDEH/EU	AE160JNYDGH/EU
3, 380-415, 50	1, 220-240, 50	3, 380-415, 50	1, 220-240, 50	3, 380-415, 50	1, 220-240, 50	3, 380-415, 50
2.48 / 9.00	3.75 / 12.00	3.75 / 12.00	3.75 / 14.00	3.75 / 14.00	3.75 / 16.00	3.75 / 16.00
1.88 / 7.50	3.30 / 12.00	3.30 / 12.00	3.30 / 14.00	3.30 / 14.00	3.30 / 15.00	3.30 / 15.00
0.55 / 2.01	0.81 / 2.59	0.81 / 2.59	0.81 / 3.15	0.81 / 3.15	0.81 / 3.76	0.81 / 3.76
0.52 / 2.06	0.85 / 3.10	0.85 / 3.10	0.85 / 3.80	0.85 / 3.80	0.85 / 4.14	0.85 / 4.14
0.9 / 3.3	3.7 / 11.7	1.3 / 4.1	3.7 / 14.3	1.3 / 4.7	3.7 / 16.9	1.3 / 5.7
0.9 / 3.4	3.9 / 14.0	1.3 / 4.7	3.9 / 17.0	1.3 / 5.7	3.9 / 18.6	1.3 / 6.2
4,48	4,63	4,63	4,44	4,44	4,26	4,26
3,64	3,87	3,87	3,68	3,68	3,62	3,62
4,5	4,5	4,5	4,48	4,48	4,45	4,45
4,65	4,93	4,93	4,91	4,91	4,89	4,89
7,7	9,8	9,8	11,1	11,1	12,5	12,5
3,38	3,28	3,28	3,25	3,25	3,14	3,14
7,6	10,3	10,3	11,8	11,8	13,4	13,4
2,45	2,57	2,57	2,55	2,55	2,5	2,5
A++	A++	A++	A++	A++	A++	A++
A++	A+	A+	A+	A+	A+	A+
10	28	10	30	11	32	12
16,1	35	16,1	37,5	16,1	40	16,1
26/22	35/35	35/35	40/40	40/40	46/44	46/44
25~55	25~55	25~55	25~55	25~55	25~55	25~55
5~25	5~25	5~25	5~25	5~25	5~25	5~25
6.35 (1/4")	9.52 (3/8")	9.52 (3/8")	9.52 (3/8")	9.52 (3/8")	9.52 (3/8")	9.52 (3/8")
15.88 (5/8")	15.88 (5/8")	15.88 (5/8")	15.88 (5/8")	15.88 (5/8")	15.88 (5/8")	15.88 (5/8")
-25~35	-25~35	-25~35	-25~35	-25~35	-25~35	-25~35
10~46	10~46	10~46	10~46	10~46	10~46	10~46
-25~43	-25~43	-25~43	-25~43	-25~43	-25~43	-25~43
BLDC Twin Rotary	BLDC Twin Rotary	BLDC Twin Rotary	BLDC Twin Rotary	BLDC Twin Rotary	BLDC Twin Rotary	BLDC Twin Rotary
49/50	50/50	50/50	50/52	50/52	52/54	52/54
64/63	64/64	64/64	64/66	64/66	66/69	66/69
76	100	101,5	100	101,5	100	101,5
940 x 998 x 330	940 x 1,420 x 330	940 x 1,420 x 330	940 x 1,420 x 330	940 x 1,420 x 330	940 x 1,420 x 330	940 x 1,420 x 330
R410A	R410A	R410A	R410A	R410A	R410A	R410A
1,900 / 3.97	2,980 / 6.22	2,980 / 6.22	2,980 / 6.22	2,980 / 6.22	2,980 / 6.22	2,980 / 6.22

Dimensional Drawings

EHS Split

AE040/060JXEDEH/EU

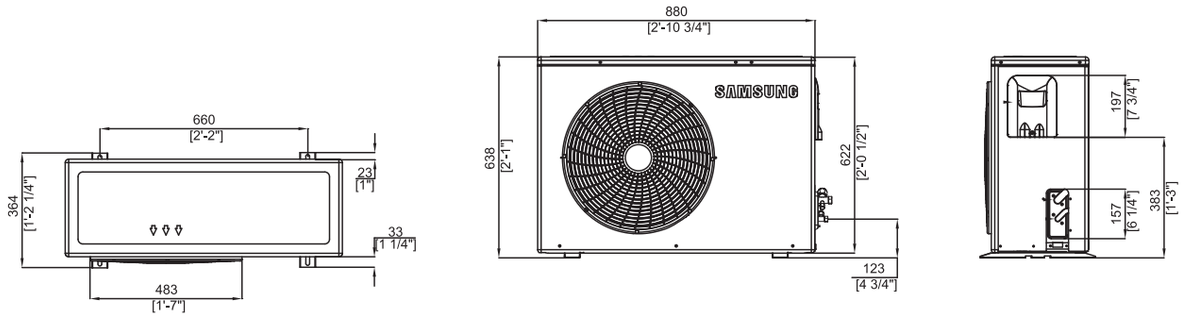

AE090JXED*H/EU

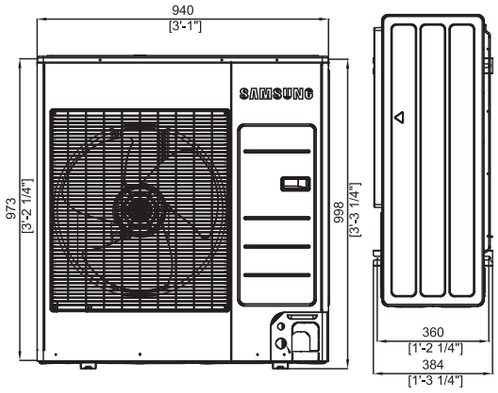

AE120/140/160JXED*H/EU

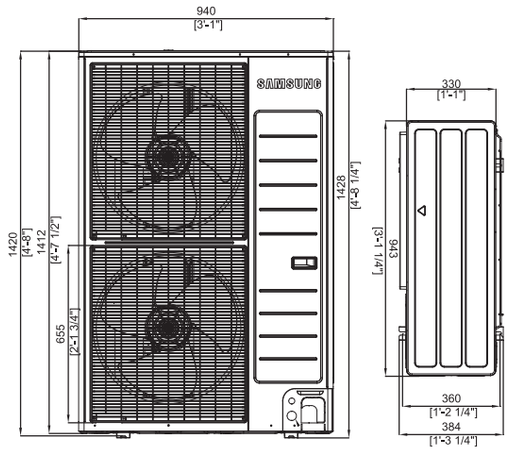

AE090/160JNYD*H/EU

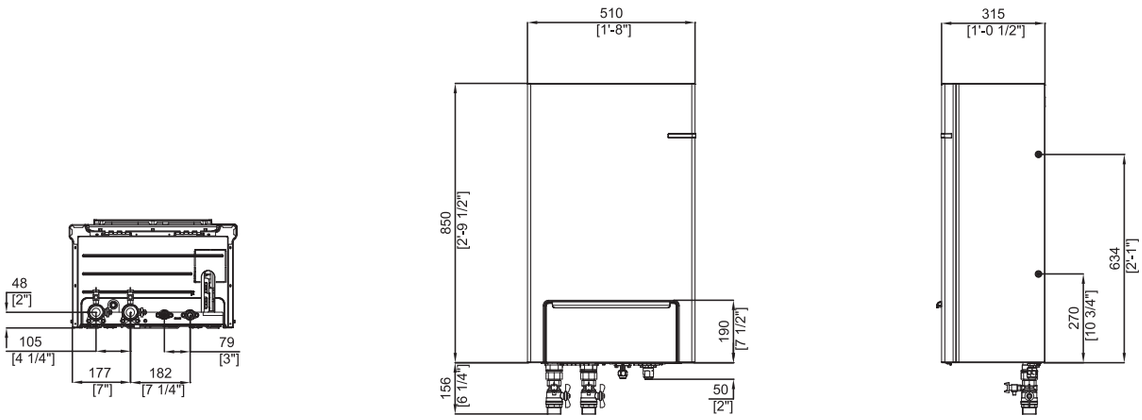

Product Features

EHS TDM Plus

'All in one' air-water and air-air system for all needs. The EHS TDM Plus system can be used throughout the year for cooling and heating both in air-water mode and in air-air mode. It enables underfloor heating/cooling and to power low temperature radiators.

- Refrigerant piping
- Water piping (supply)
- Water piping (intake)

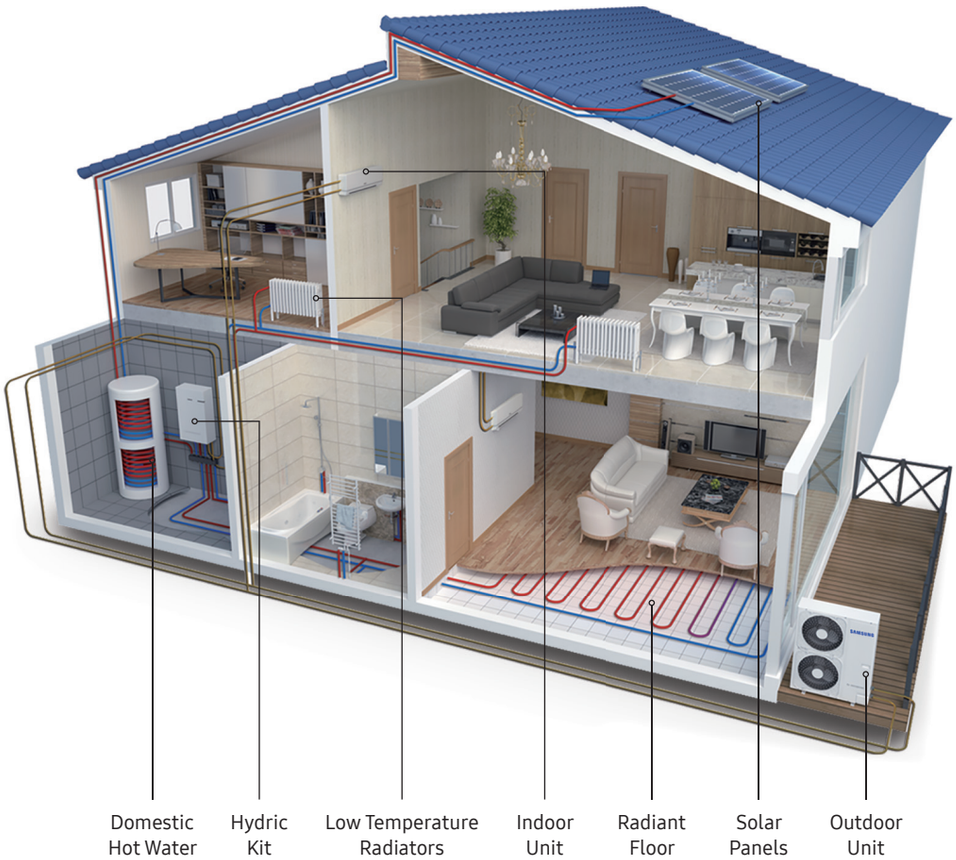

Air-Air and Air-Water

- Outdoor unit + EEV kit + Indoor units
- Outdoor unit + Hydronic system + Underfloor heating/ cooling
- Low temperature radiator, no central heating
- Domestic hot water storage tank

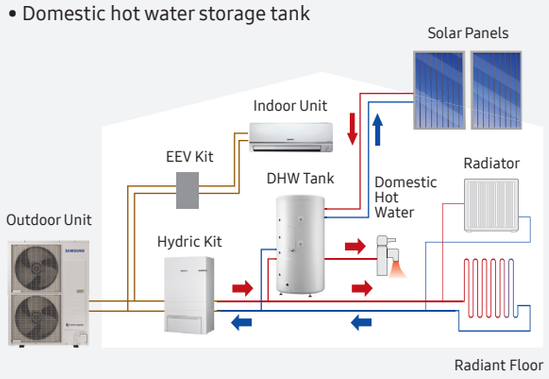

Only Air-Water

- Outdoor unit + Hydronic system + Underfloor heating/ cooling
- Low temperature radiator, no central heating
- Domestic hot water storage tank

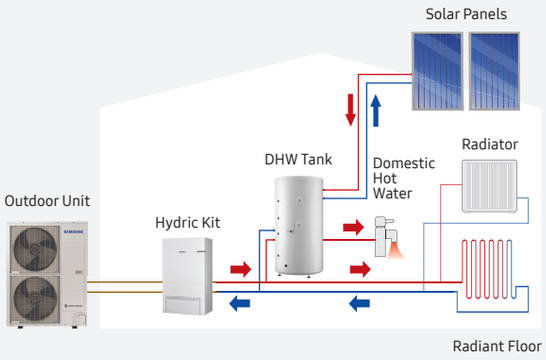

Fast heating thanks to the TDM technology (Time Division Multi)

The underfloor radiant panel heating is known to be the optimal system to obtain the ideal thermal comfort. 4~8 hours from its activation are required to adjust the room temperature. The TDM technology used in the EHS system with air terminal units enables to significantly reduce the adjustment times of the room temperature.

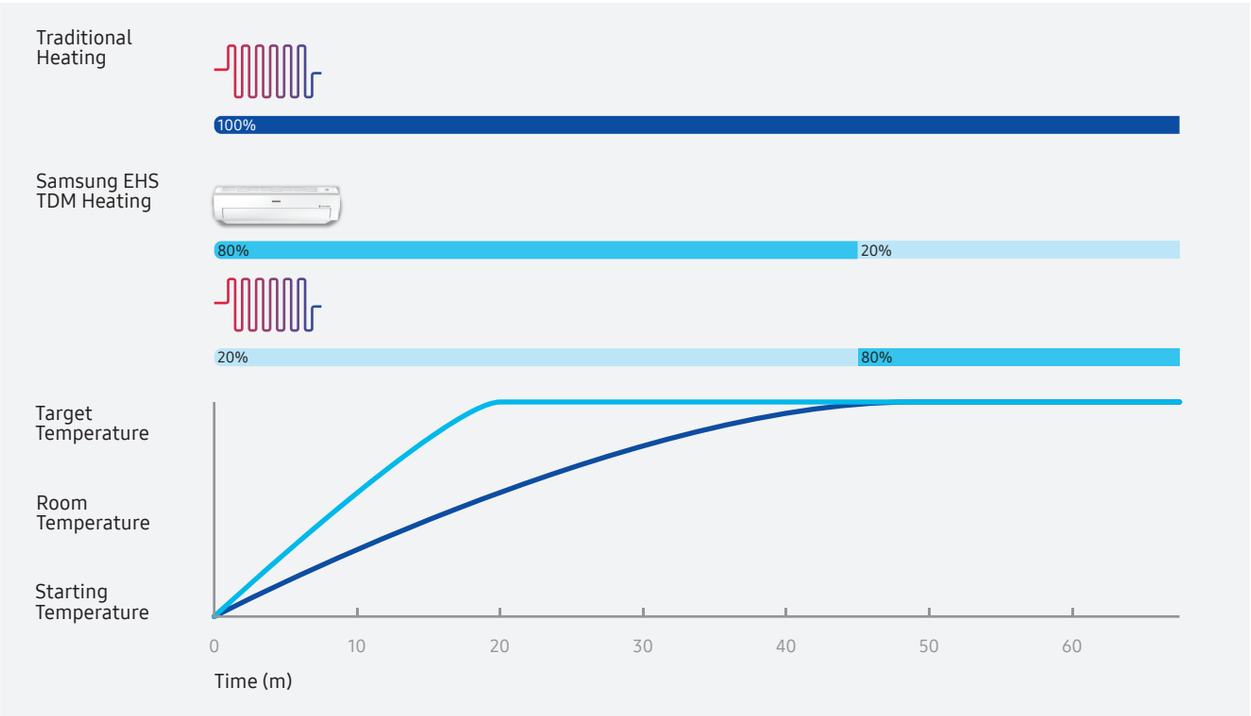

Traditional Heating

Samsung EHS TDM Heating

50% reduction in operating costs and installation space

With an outdoor unit operating in air-air and air-water modes, the EHS TDM Plus system allows relevant saving both with regard to purchase and installation costs and to the space required for the installation in case of a single outdoor unit.

High performances even at low temperature

The EHS TDM Plus system is equipped with an inverter compressor managed according to the outdoor temperature that is able to supply 90% of its nominal power also in case of outdoor temperature at -10°C, and to operate anyway with outdoor temperatures up to -20°C.

A system for all seasons

Each season and each climate require a specific usage. The EHS TDM Plus system can be used throughout the year for heating and cooling both in air-water mode and in air-air mode.

Specifications

EHS TDM Plus

Model Name					AE044MXTPEH/EU	AE066MXTPEH/EU
System	Power Supply			Φ, V, Hz	1, 220-240, 50	1, 220-240, 50
	Performance A2W	Nominal Capacity	Heating (Min/Max)	kW	1.67 / 4.40	1.67 / 6.60
			Cooling (Min/Max)	kW	1.66 / 4.40	1.66 / 6.60
		Power Input (Nominal)	Heating (Min/Max)	kW	0.41 / 0.93	0.41 / 1.47
			Cooling (Min/Max)	kW	0.37 / 1.03	0.37 / 1.48
		Current Input (Nominal)	Heating (Min/Max)	A	1.7 / 4.3	1.7 / 6.7
			Cooling (Min/Max)	A	1.7 / 4.9	1.7 / 6.9
		COP (Nominal Heating)			4,73	4,49
		EER (Nominal Cooling)			4,95	4,53
		SCOP(35°C)			4,38	4,39
		ESEER			5,08	4,92
	Performance A7°C/W35°C	Capacity	Heating	kW	4,00	6,10
		COP	Heating	-	3,45	3,33
	Performance A2°C/W35°C	Capacity	Heating	kW	4,00	5,80
		COP	Heating	-	3,54	3,31
	Performance A-7°C/W35°C	Capacity	Heating	kW	3,90	5,70
		COP	Heating	-	2,81	2,79
	Energy Efficiency Rating	Heating (35°C)		-	A++	A++
		Heating (55°C)		-	A+	A+
	Maximum connectable indoor units			EA	2	3
	Field Wiring	Minimum Circuit		A	18	20
		Maximum Fuse		A	25	25
	Water Connections	Water Flow Rate	Min/Std/Max	l/min	7.0/12.7/42.0	7.0/19.0/42.0
	Refrigerant	Piping Connections	Liquid pipe	Φ, mm (inch)	9.52 (3/8")	9.52 (3/8")
			Gas pipe(A2W)	Φ, mm (inch)	15.88 (5/8")	15.88 (5/8")
			Gas pipe(A2A)	Φ, mm (inch)	15.88 (5/8")	15.88 (5/8")
		Piping length (ODU-IDU)	Max.[Equiv.]	m	30	30
		Level difference (IDU-IDU)	Max.	m	20	20
		Chargeless Length		m	10	10
		Type		-	R410A	R410A
		Factory Charging		kg	2,6	2,6
				tCO2e	5,43	5,43
		Control Method		-	EEV	EEV
Outdoor Unit	Compressor	Type		-	Rotary Intverter	Rotary Intverter
	Fan	Type		-	Propeller Fan	Propeller Fan
	Sound	Sound Pressure (Heating/Cooling)		dB(A)	47/46	48/47
		Sound Power		dB(A)	65	67
	External Dimension	Net Weight		kg	61	61
		Net Dimensions (WxHxD)		mm	880 x 793 x 310	880 x 793 x 310
	Operating Temp. Range	A2W	Heating	°C	-25~35	-25~35
			Cooling	°C	10~46	10~46
			D.Hot Water	°C	-25~43	-25~43
		A2A	Heating	°C	-25~24	-25~24
			Cooling	°C	10~46	10~46

AE090MXTPEH/EU	AE090MXTPGH/EU	AE120MXTPEH/EU	AE120MXTPGH/EU	AE160MXTPEH/EU	AE160MXTPGH/EU
1, 220-240, 50	3, 380-415, 50	1, 220-240, 50	3, 380-415, 50	1, 220-240, 50	3, 380-415, 50
2.39 / 9.00	2.48 / 9.00	3.75 / 12.00	3.75 / 12.00	3.75 / 16.00	3.75 / 16.00
1.82 / 8.00	1.88 / 8.00	3.30 / 12.00	3.30 / 12.00	3.30 / 14.50	3.30 / 14.5
0.56 / 2.12	0.58 / 2.12	0.85 / 2.72	0.85 / 2.72	0.85 / 3.95	0.85 / 3.95
0.42 / 1.85	0.47 / 1.86	0.80 / 2.90	0.80 / 2.90	0.80 / 3.84	0.80 / 3.84
2.6 / 9.6	1.0 / 3.5	3.9 / 12.4	1.4 / 4.3	3.9 / 18.0	1.4 / 6.0
1.9 / 8.5	0.8 / 3.0	3.6 / 13.2	1.2 / 4.5	3.6 / 13.2	1.2 / 5.9
4,25	4,25	4,41	4,41	4,05	4,05
4,32	4,30	4,14	4,14	3,78	3,78
4,39	4,39	4,59	4,59	4,59	4,59
5,36	4,93	5,29	5,29	5,21	5,21
8,00	8,30	11,20	11,20	15,00	15,00
3,36	3,32	3,39	3,39	3,18	3,18
7,70	7,70	11,00	11,00	13,70	13,70
3,47	3,47	3,41	3,41	3,19	3,19
7,40	7,40	10,60	10,60	14,00	14,00
2,79	2,79	2,97	2,97	2,73	2,73
A++	A++	A++	A++	A++	A++
A+	A+	A+	A+	A+	A+
4	4	5	5	7	7
22	10	28	10	32	12
27,5	16,1	35	16,1	40	16,1
7.0/26.0/42.0	7.0/26.0/42.0	12.0/34.6/58.0	12.0/34.6/58.0	12.0/46.2/58.0	12.0/46.2/58.0
9.52 (3/8")	9.52 (3/8")	9.52 (3/8")	9.52 (3/8")	9.52 (3/8")	9.52 (3/8")
15.88 (5/8")	15.88 (5/8")	15.88 (5/8")	15.88 (5/8")	15.88 (5/8")	15.88 (5/8")
15.88 (5/8")	15.88 (5/8")	15.88 (5/8")	15.88 (5/8")	15.88 (5/8")	15.88 (5/8")
30	30	70	70	70	70
20	20	30	30	30	30
10	10	10	10	10	10
R410A	R410A	R410A	R410A	R410A	R410A
2,4	2,4	3,5	3,5	3,5	3,5
5,01	5,01	7,31	7,31	7,31	7,31
EEV	EEV	EEV	EEV	EEV	EEV
Rotary Intverter	Rotary Intverter	Rotary Intverter	Rotary Intverter	Rotary Intverter	Rotary Intverter
Propeller Fan	Propeller Fan	Propeller Fan	Propeller Fan	Propeller Fan	Propeller Fan
51/50	51/50	52/51	52/51	55/54	55/54
69	69	70	70	73	73
74	76	107	107	107	107
940 x 998 x 330	940 x 998 x 330	940 x 1,420 x 330	940 x 1,420 x 330	940 x 1,420 x 330	940 x 1,420 x 330
-25~35	-25~35	-25~35	-25~35	-25~35	-25~35
10~46	10~46	10~46	10~46	10~46	10~46
-25~43	-25~43	-25~43	-25~43	-25~43	-25~43
-25~24	-25~24	-25~24	-25~24	-25~24	-25~24
10~46	10~46	10~46	10~46	10~46	10~46

Dimensional Drawings

Outdoor unit

AE044/066MXTPEH**

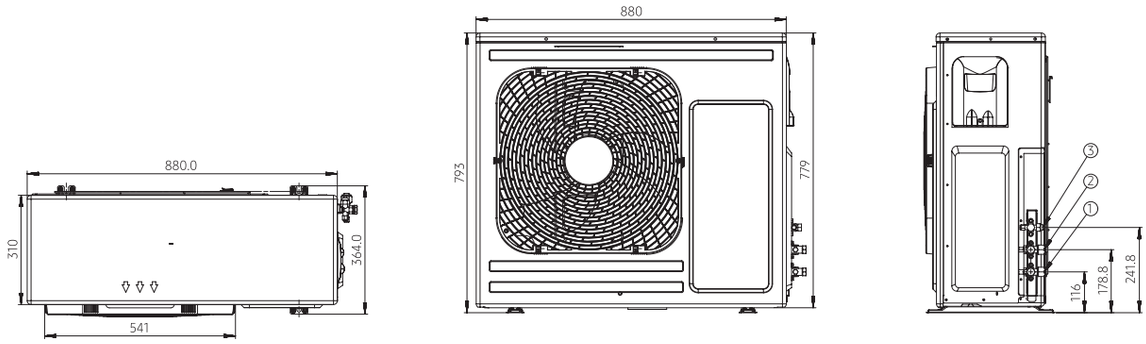

AE090MXTP*H**

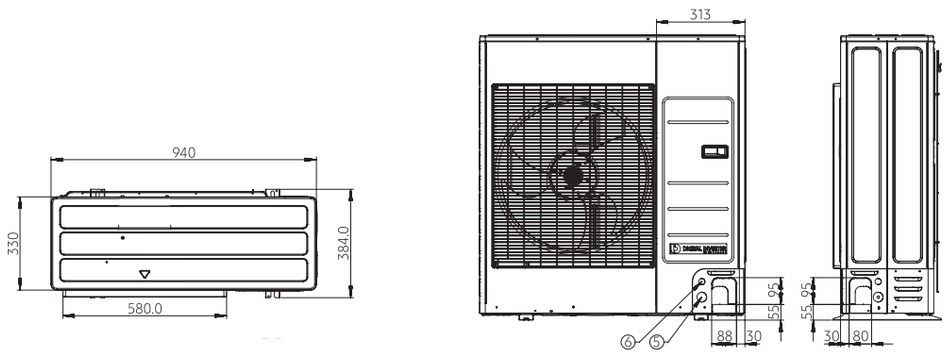

AE120/160MXTP*H**

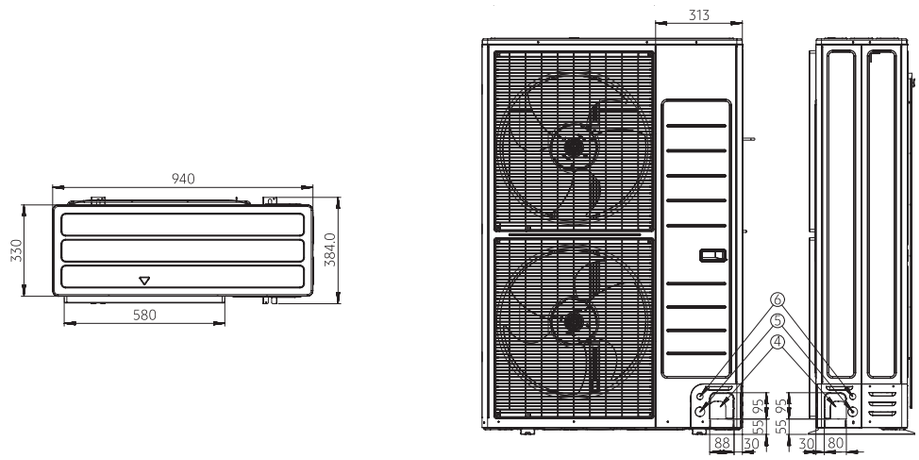

follow
SAMSUNG

Specifications

EHS TDM Plus Indoor Unit - Wall Mounted

Model Name				AE022MNADEH/EU	AE028MNADEH/EU	AE036MNADEH/EU	AE056MNADEH/EU	AE071MNADEH/EU
Power Supply			Φ, V, Hz	1,220-240,50	1,220-240,50	1,220-240,50	1,220-240,50	1,220-240,50
Performance	Capacity	Cooling	kW	2,2	2,8	3,6	5,6	7,1
		Heating	kW	2,5	3,2	4,0	6,3	8,0
Power	Power Input	Cooling	W	15,0	16,0	20,0	27,0	41,0
		Heating		18,0	24,0	28,0	31,0	53,0
	Current Input	Cooling	A	0,1	0,1	0,2	0,2	0,3
		Heating		0,2	0,2	0,2	0,3	0,4
	Type		-	Crossflow Fan	Crossflow Fan	Crossflow Fan	Crossflow Fan	Crossflow Fan
	Quantity		EA	1	1	1	1	1
Fan	Airflow Rate	H/M/L (UL)	m³/min	5.4(C) / 6.5(H)	5.7(C) / 8.5(H)	7.1 (C) / 10.0 (H)	11.8 (C) / 15.0 (H)	14.8 (C) / 17.4 (H)
Fan Motor	Type		-	BLDC Feedback	BLDC Feedback	BLDC Feedback	BLDC Feedback	BLDC Feedback
	Output x n		W	27x1	27x1	27x1	27x1	27x1
Piping Connections	Liquid Pipe		Φ, mm (inch)	6.35 (1/4")	6.35 (1/4")	6.35 (1/4")	6.35 (1/4")	9.52 (3/8")
	Gas Pipe		Φ, mm (inch)	12.7 (1/2")	12.7 (1/2")	12.7 (1/2")	12.7 (1/2")	15.88 (5/8")
Wiring connections	For power supply below 20m/over 20m	Min.	mm²	1.5/2.5	1.5/2.5	1.5/2.5	1.5/2.5	1.5/2.5
	Communication	Min.	mm²	0,75	0,75	0,75	0,75	0,75
Refrigerant	Type		-	R410A	R410A	R410A	R410A	R410A
	Control Method		-	EEV NOT INCLUDED	EEV NOT INCLUDED	EEV NOT INCLUDED	EEV NOT INCLUDED	EEV NOT INCLUDED
Sound	Sound Pressure	H/M/L	dB(A)	33 / 28 / 23	35 / 30 / 25	36 / 32 / 29	39 / 35 / 32	44 / 40 / 36
	Sound Power			50	53	54	57	61
Dimensions	Net Weight		kg	7,9	8	9,5	14,3	14,3
	Net Dimensions (W×H×D)		mm	750x249x246	750x249x246	826x261x261	1065x301x294	1065x301x294

Accessories

Electronic Expansion Valve Kit		Individual Control System		
Room EEV Kit MXD-ExxKxxxA	Single EEV Kit MEV-ExxSA	Standard AR-EH03E	Optional MWR-SH10N	Optional MWR-WE13N

Dimensional Drawings

EHS TDM Plus Indoor Unit - Wall Mounted

AE022/028MNDEH✱✱

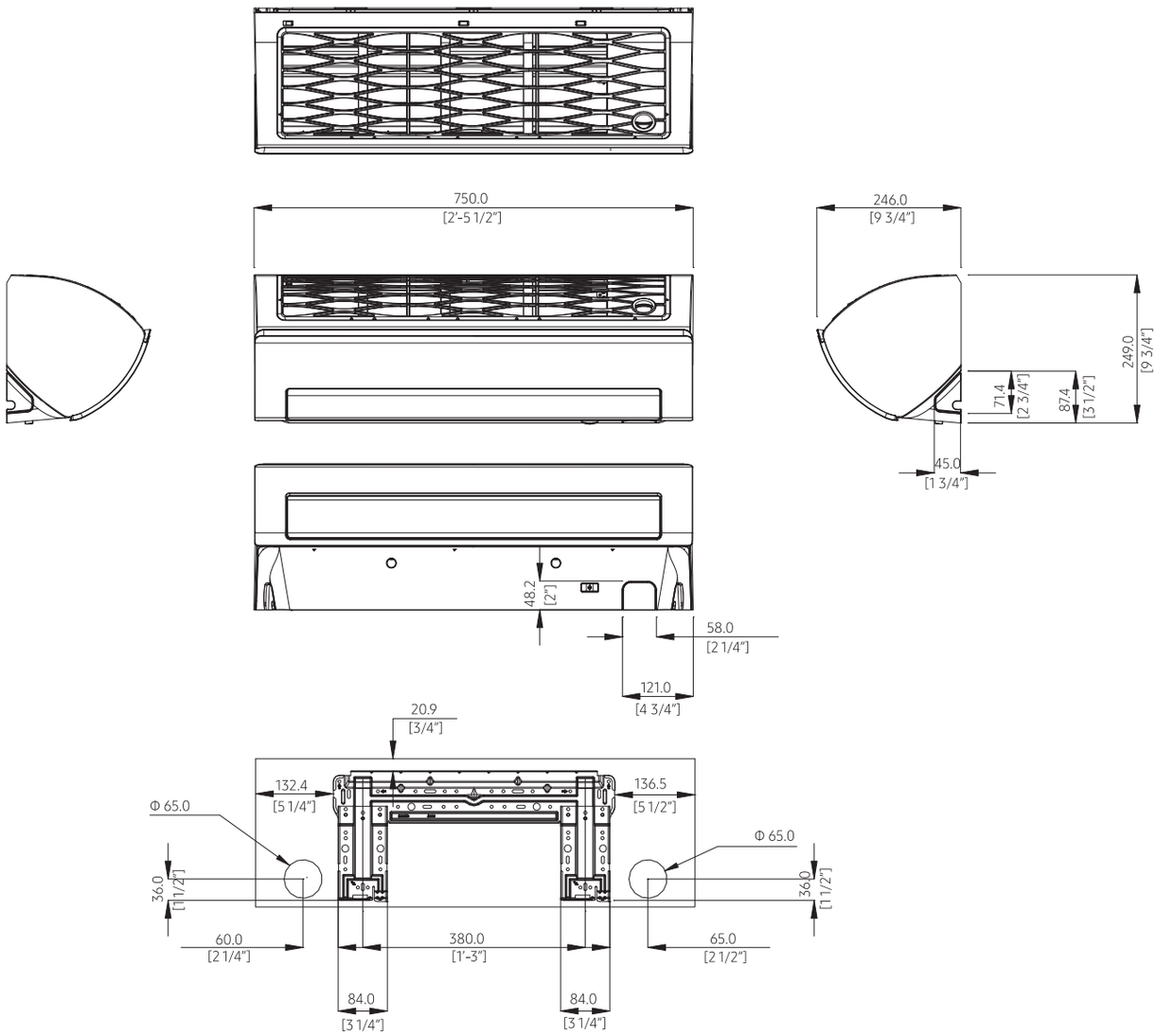

NO	Name	Description	
		2.2 kW	2.8 kW
1	Refrigerant gas pipe	Φ12.7 Flare	
2	Refrigerant liquid pipe	Φ6.35 Flare	
3	Drain pipe connection	ID 18 Hose	

EHS TDM Plus Indoor Unit - Wall Mounted

AE036MNDEH✱✱

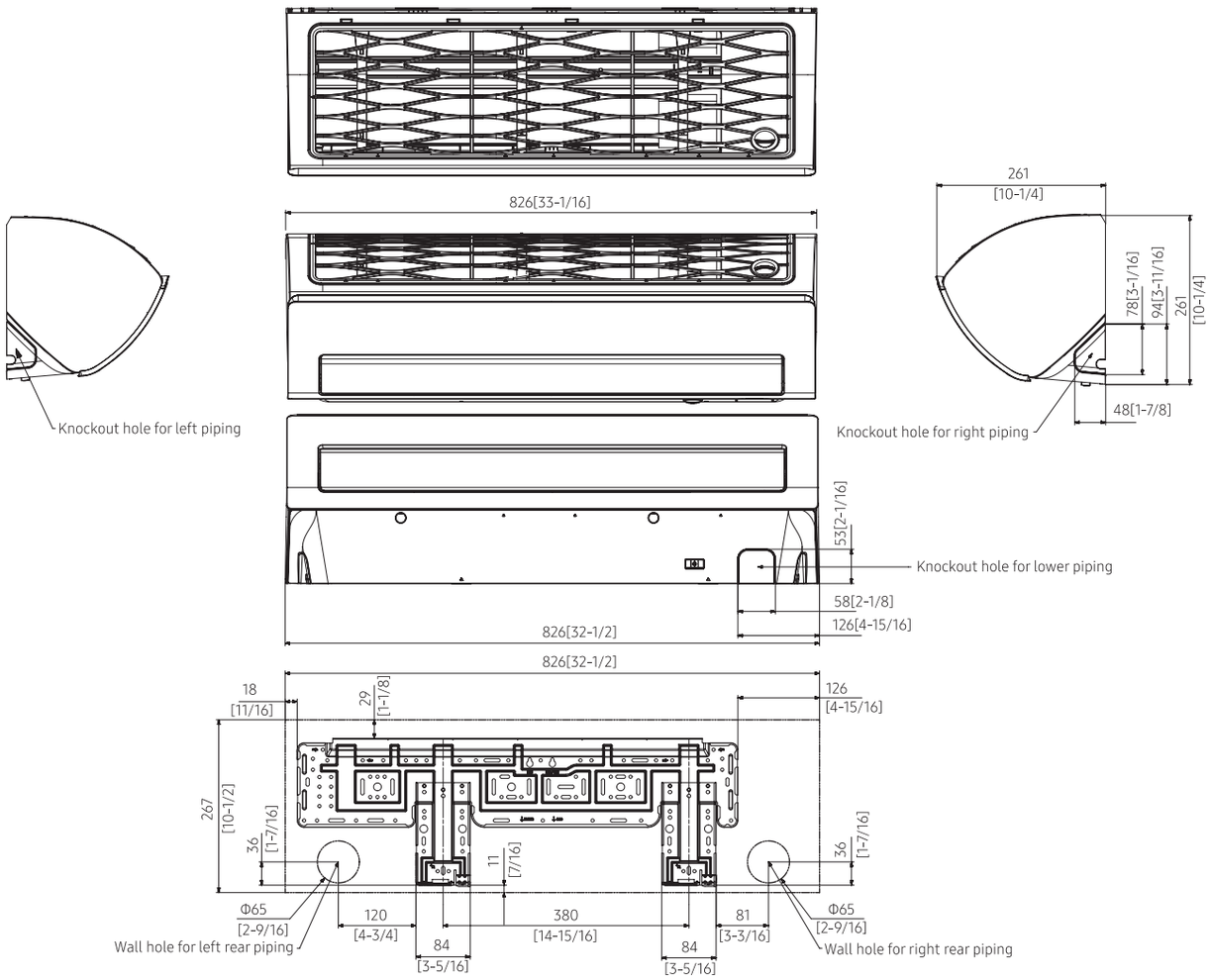

NO	Name	Description
1	Liquid pipe connection)	Φ6.35(1/4
2	Gas pipe connection)	Φ12.7(Φ1/2
3	Drain pipe connection	ID 18 Hose
4	Power & Communication wiring conduit	-

EHS TDM Plus Indoor Unit - Wall Mounted

AE056/071MNDEH✱✱

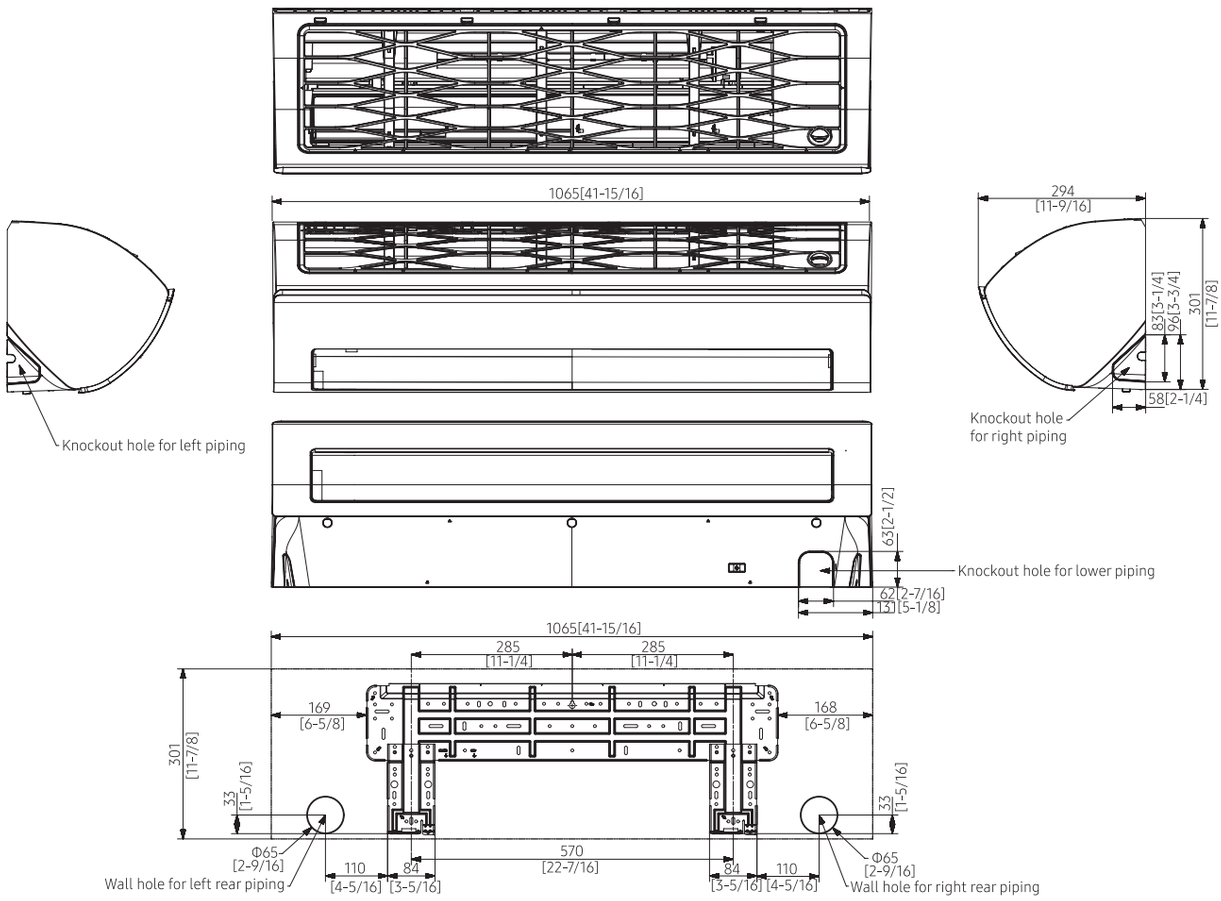

NO	Name	Description	
		5.6 kW	7.1 kW
1	Liquid pipe connection	Φ6.35(1/4)	Φ9.52(3/8)
2	Gas pipe connection	Φ12.7(Φ1/2)	Φ15.88(Φ5/8)
3	Drain pipe connection	ID 18 Hose	
4	Power & Communication wiring conduit	-	

Specifications

EHS TDM Plus Indoor Unit - Duct

				MSP Duct	MSP Duct
Type					
Model Name				AE071MNMPEH/EU	AE090MNMPEH/EU
Power Supply			Φ, V, Hz	1,220-240,50	1,220-240,50
Performance	Capacity (Cooling/Heating)		Kw	7.1/8.0	9.0/10.0
Power	Power Input (Cooling/Heating)		W	120/120	145/145
	Current Input (Cooling/Heating)		A	1.0/1.0	1.2/1.2
Fan	Type		-	Sirocco Fan	Sirocco Fan
	Quantity		EA	2	2
	Airflow Rate	H/M/L (UL)	m^3/min	22 / 19 / 16	29 / 25 / 22
	External Pressure	Max. (Min/Std/Max)	mmAq	0 / 3 / 15	0 / 4 / 15
			Pa	0 / 29.4 / 147.2	0 / 39.2 / 147.2
Fan Motor	Type		-	BLDC Feedback	BLDC Feedback
	Output x n		W	153x1	153x1
Piping Connections	Liquid Pipe		Φ, mm (inch)	9.52 (3/8")	9.52 (3/8")
	Gas Pipe		Φ, mm (inch)	15.88 (5/8")	15.88 (5/8")
Wiring connections	For power supply Below 20m/over 20m	Min.	mm^2	1.5/2.5	1.5/2.5
	Communication	Min.	mm^2	0,75	0,75
Refrigerant	Type		-	R410A	R410A
Sound	Sound Pressure H/M/L		dB(A)	37 / 33 / 29	38 / 35 / 32
	Sound Power			57	58
Dimensions	Net Weight		kg	25,5	33
	Net Dimensions (W×H×D)		mm	850x250x700	1,200x250x700
Optional Accessories	Drain pump	Model	-	MDP-G075SQ(built-in)	MDP-G075SQ(built-in)
				MDP-G075SP(external)	MDP-G075SP(external)
		Max. lifting Height/Displacement	mm / Liter/h	750 / 24	750 / 24

Accessories

Drain Pumps		Individual Control System			SPi Ionizer
External MDP-G075SP	Internal MDP-G075SQ	Standard AR-EH03E	Optional MWR-SH10N	Optional MWR-WE13N	Optional MSD-EAN1

Slim Duct	Slim Duct	Slim Duct	Slim Duct
AE022MNLDEH/EU	**AE028MNLDEH/EU**	**AE036MNLDEH/EU**	**AE056MNLDEH/EU**
1,220-240,50	1,220-240,50	1,220-240,50	1,220-240,50
2.2/2.5	2.8/3.2	3.6/4.0	5.6/6.3
55/55	60/60	65/65	95/95
0.30/0.30	0.32/0.32	0.33/0.33	0.53/0.53
Sirocco Fan	Sirocco Fan	Sirocco Fan	Sirocco Fan
2	2	2	2
7.0 / 6.1 / 5.3	7.5 / 6.6 / 5.6	7.5 / 6.6 / 5.6	12.0 / 10.5 / 9.0
0/1/3	0/1/3	0/1/3	0/2/4
0/9.8/29.4	0/9.8/29.4	0/9.8/29.4	0/19.6/39.2
SSR non-feedback	SSR non-feedback	SSR non-feedback	SSR non-feedback
28x1	28x1	28x1	50x1
6.35 (1/4")	6.35 (1/4")	6.35 (1/4")	6.35 (1/4")
12.7 (1/2")	12.7 (1/2")	12.7 (1/2")	12.7 (1/2")
1.5/2.5	1.5/2.5	1.5/2.5	1.5/2.5
0,75	0,75	0,75	0,75
R410A	R410A	R410A	R410A
26 / 24 / 21	28 / 26 / 23	32 / 30 / 27	36 / 34 / 31
49	49	51	55
19	19	19,5	24,5
700 x 199 x 600	700 x 199 x 600	700 x 199 x 600	900x199x600
MDP-E075SEE3D	MDP-E075SEE3D	MDP-E075SEE3D	MDP-E075SEE3D
750 / 24	750 / 24	750 / 24	750 / 24

Dimensional Drawings

EHS TDM Plus Indoor Unit - MSP Duct

AE071MNMPEH/EU

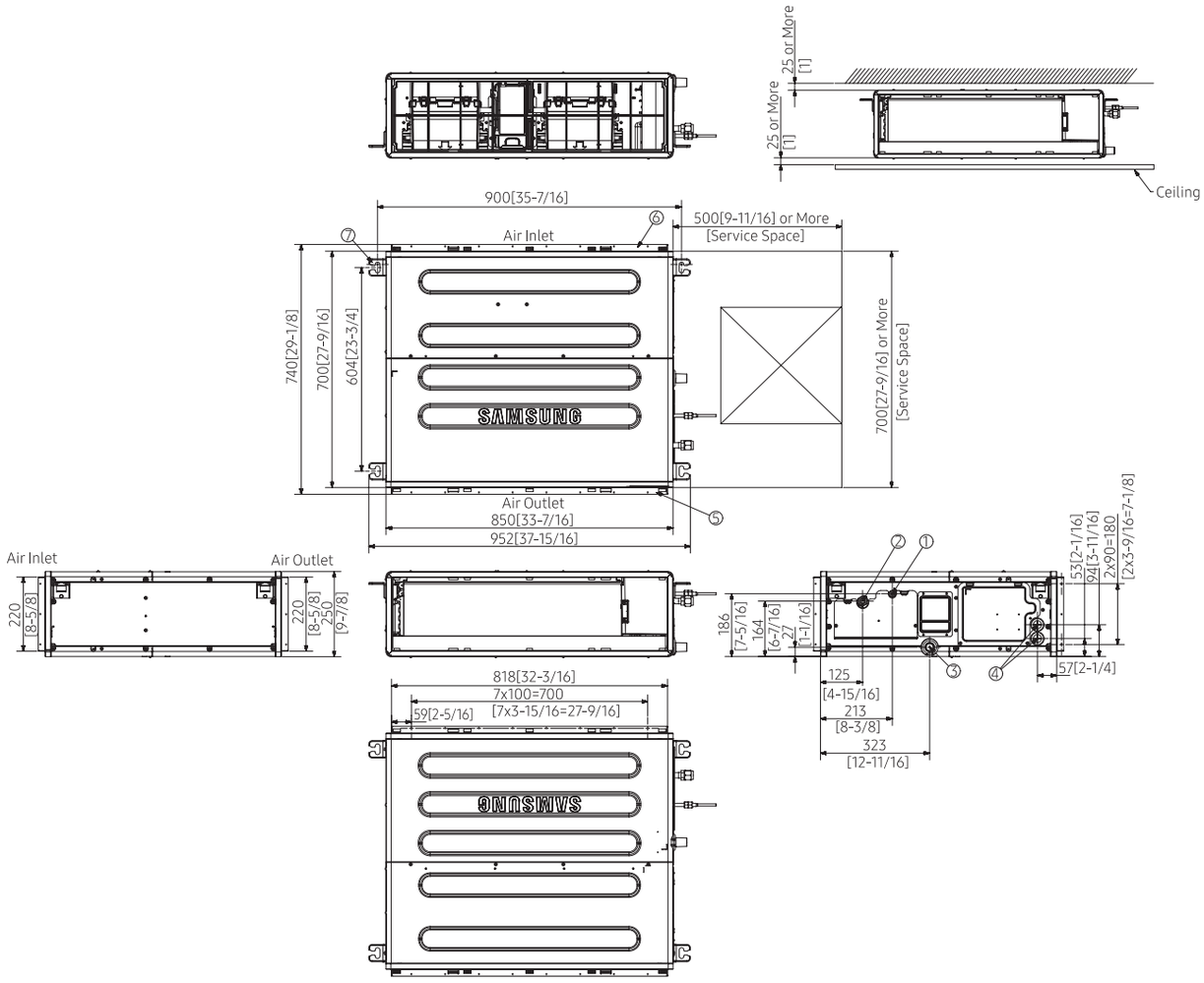

NO	Name	Description
1	Liquid pipe connection	Φ9.52(3/8)
2	Gas pipe connection	Φ15.88(5/8)
3	Drain pipe connection	VP-25(OD 32, ID 25)
4	Power supply & Communication wiring conduit	-
5	Air suction flange	-
6	Air discharge flange	-
7	Hook Use	M8~M10 bolt(4ea)

EHS TDM Plus Indoor Unit - MSP Duct

AE090MNMPEH※※

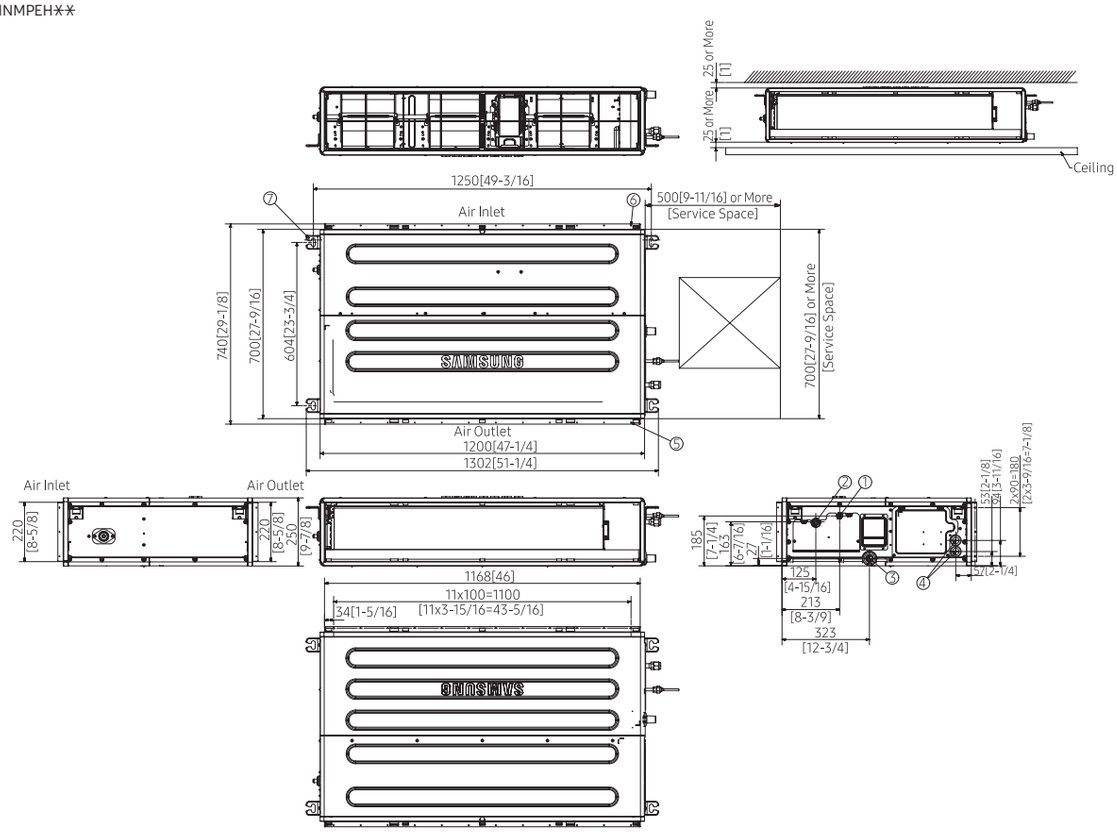

NO	Name	Description
1	Liquid pipe connection	Φ9.52(3/8)
2	Gas pipe connection	Φ15.88(5/8)
3	Drain pipe connection	VP-25(OD 32, ID 25)
4	Power supply & Communication wiring conduit	-
5	Air suction flange	-
6	Air discharge flange	-
7	Hook Use	M8~M10 bolt(4ea)

Dimensional Drawings

EHS TDM Plus Indoor Unit - Slim Duct

E022/028/036MNLDEH**

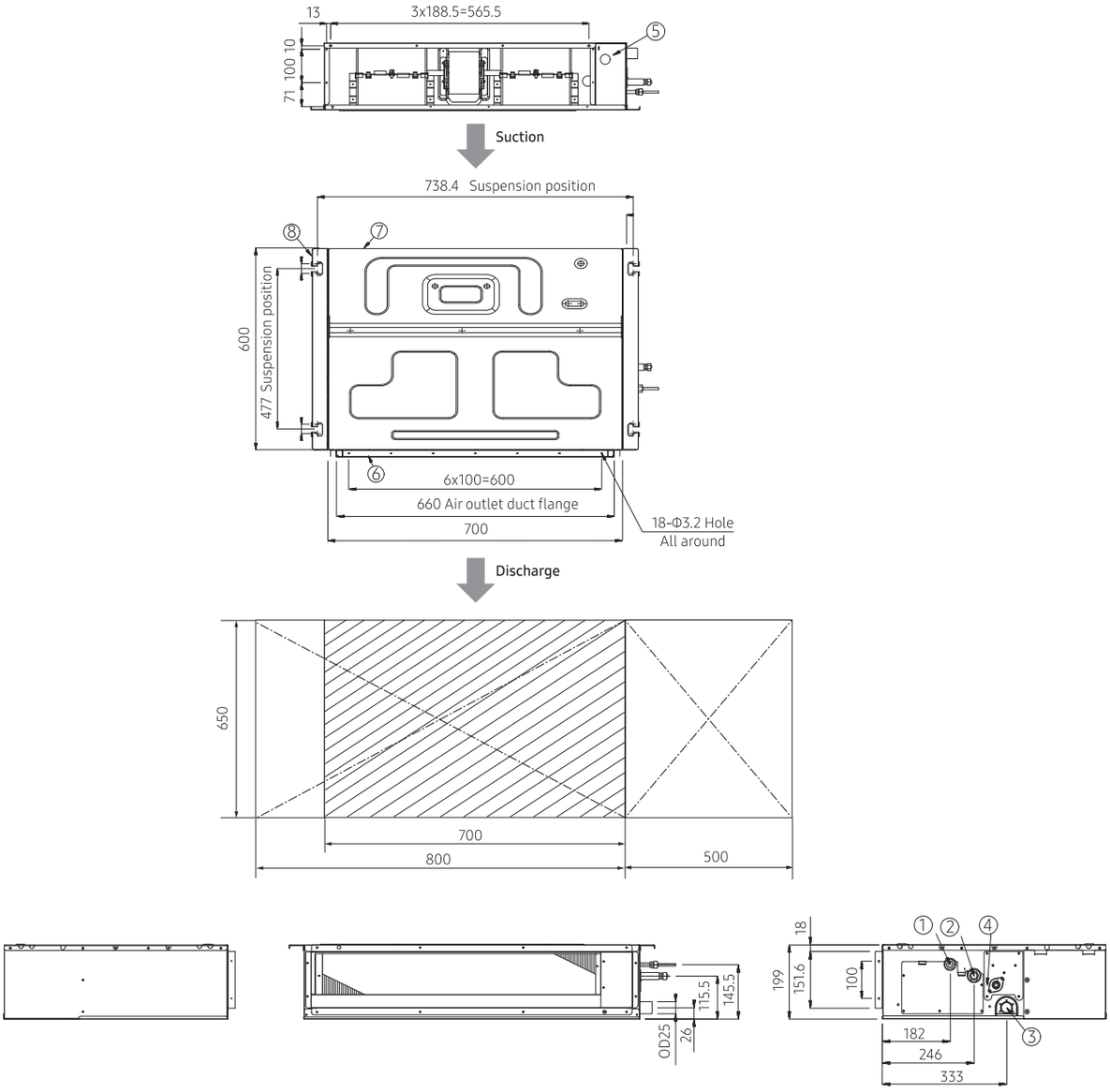

NO	Name	Description
1	Liquid pipe connection	Φ6.35(1/4")
2	Gas pipe connection	Φ12.70(1/2")
3	Drain pipe connection without drain pump	VP25(OD Φ32, ID Φ25)
4	Drain pipe connection with drain pump	P25(OD Φ32, ID Φ25)
5	Power supply/Communication connection	-
6	Air discharge grille flange	-
7	Return air side	-
8		

EHS TDM Plus Indoor Unit - Slim Duct

AE056MNLDEH**

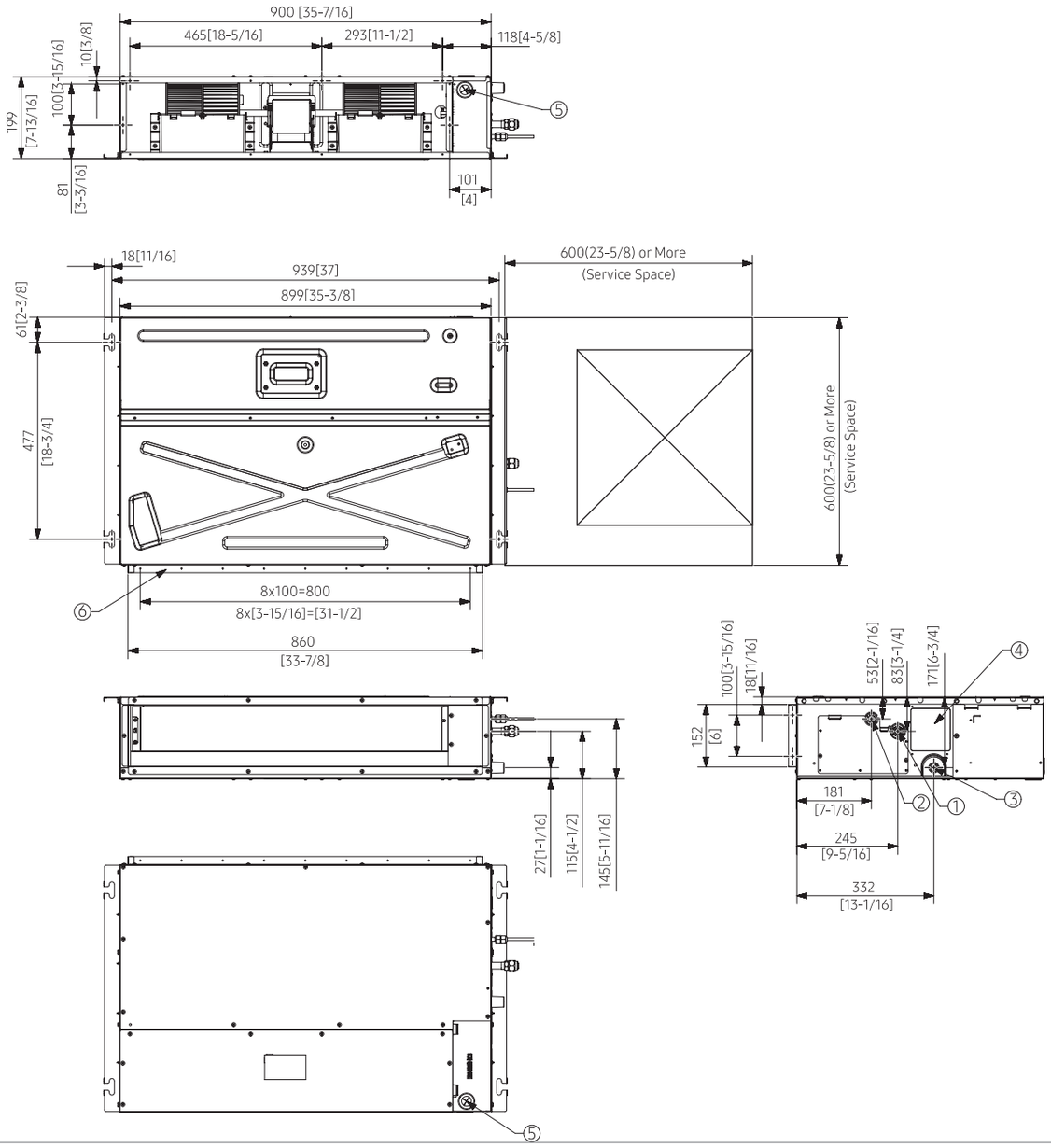

NO	Name	Description
1	Gas pipe connection	Φ12.7(1/2)
2	Liquid pipe connection	Φ6.35(1/4)
3	Drain pipe connection	VP-25(OD 32, ID 25)
4	Knockout hole for Drain pump	Option kit
5	Conduit for power supply & Communication wiring	-
6	Air outlet duct flange	-

Specifications

EHS TDM Plus Indoor Unit - Console

Model Name			AE022MNJDEH/EU	AE028MNJDEH/ EU	AE036MNJDEH/ EU	AE056MNJDEH/ EU
Power Supply		Φ, V, Hz	1,220-240,50	1,220-240,50	1,220-240,50	1,220-240,50
Performance	Capacity (Cooling/Heating)	Kw	2.2/2.5	2.8/3.2	3.6/4.0	5.6/6.3
Power	Power Input (Cooling/Heating)	W	16/16	30/30	35/35	62/62
	Current Input (Cooling/Heating)	A	0.13/0.13	0.25/0.25	0.29/0.29	0.49/0.49
Fan	Type	-	Turbo Fan	Turbo Fan	Turbo Fan	Turbo Fan
	Quantity	EA	1	1	1	1
	Airflow Rate H/M/L (UL)	m³/min	6.3 / 5.4 / 4.9	7.0 / 6.0 / 5.0	8.50 / 7.50 / 6.50	13.0 / 11.5 / 10.0
Fan Motor	Type	-	BLDC Feedback	BLDC Feedback	BLDC Feedback	BLDC Feedback
	Output x n	W	37 x 1	37 x 1	37 x 1	37 x 1
Piping Connections	Liquid Pipe	Φ, mm (inch)	6.35 (1/4")	6.35 (1/4")	6.35 (1/4")	6.35 (1/4")
	Gas Pipe	Φ, mm (inch)	12.7 (1/2")	12.7 (1/2")	12.7 (1/2")	12.7 (1/2")
Wiring connections	For power supply below 20m/ over 20m Min.	mm²	1.5/2.5	1.5/2.5	1.5/2.5	1.5/2.5
	Communication Min.	mm²	0,75	0,75	0,75	0,75
Refrigerant	Type	-	R410A	R410A	R410A	R410A
Sound	Sound Pressure (H/M/L)	dB(A)	34 / 32 / 30	38 / 36 / 34	39 / 37 / 34	43 / 40 / 37
	Sound Power		52	58	59	64
Dimensions	Net Weight	kg	15,5	16	16	16
	Net Dimensions (W×H×D)	mm	720x620x199	720x620x199	720x620x199	720x620x199

Accessories		
Individual Control System		
Standard AR-EH03E	Optional MWR-SH10N	Optional MWR-WE13N

Dimensional Drawings

EHS TDM Plus Indoor Unit - Console

AE022/028/036/056MNJDEH/EU

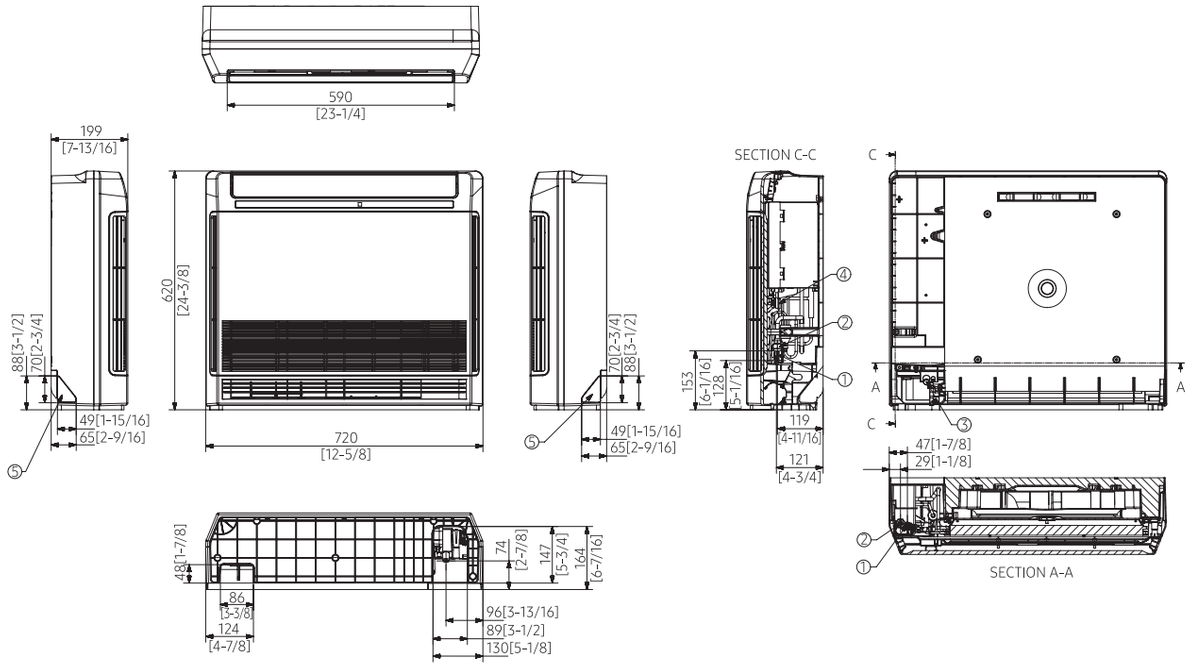

NO	Name	Description
1	Liquid pipe connection	Φ6.35(1/4)
2	Gas pipe connection	Φ12.7(1/2)
3	Drain pipe connection	ID 18mm [11/16 inch] Hose
4	Power supply & Communication wiring conduit	-
5	Knockout hole for drain hose	-

Specifications

EHS Hydro Unit

Model Name				AE090MNYDEH/EU	AE090MNYDGH/EU	AE160MNYDEH/EU	AE160MNYDGH/EU
Power Supply			Φ, V, Hz	1,220-240,50	3,380-415,50	1,220-240,50	3,380-415,50
Capacity	Heating		W	4,400~9,000	9.000	12,000~16,000	12,000~16,000
	Cooling		W	5,100~8,000	8.000	12,000~14,500	12,000~14,500
Water Connections	Water Flow Rate	Min/Std/Max	l/min	7/-/42	7/-/42	12/-/58	12/-/58
	Water Pressure	Max.	bar	Max 3.0	Max 3.0	Max 3.0	Max 3.0
	Water Pipe	Inlet	Φ, inch	BSPP1+1/4"	BSPP1+1/4"	BSPP1+1/4"	BSPP1+1/4"
		Outlet	Φ, inch	BSPP1+1/4"	BSPP1+1/4"	BSPP1+1/4"	BSPP1+1/4"
	Leaving Water Temperature	Heating	°C	15~55 (H/P : 25~55)	15~55 (H/P : 25~55)	15~55 (H/P : 25~55)	15~55 (H/P : 25~55)
		Cooling	°C	5~25	5~25	5~25	5~25
Piping Connections	Liquid pipe		Φ, mm (inch)	6.35 (1/4")	6.35 (1/4")	9.52 (3/8")	9.52 (3/8")
	Gas pipe		Φ, mm (inch)	15.88 (5/8")	15.88 (5/8")	15.88 (5/8")	15.88 (5/8")
Water Pump	Type		-	Centrifugal (UPM3 25-7.5)	Centrifugal (UPM3 25-7.5)	Centrifugal (Stratos 25 1-9)	Centrifugal (Stratos 25 1-9)
	Motor Input		W	60	60	90	90
	Number of Unit		EA	1	1	1	1
Flow Switch	Type		-	Magnetic, Decreasing	Magnetic, Decreasing	Magnetic, Decreasing	Magnetic, Decreasing
	Min. flow rates		l/min	7 ± 1.5	7 ± 1.5	12 ± 1.5	12 ± 1.5
Electric Expansion Valve			-	EDM Φ3.2	EDM Φ3.2	EDM Φ4.0	EDM Φ4.0
Electric Heater			W	4.000	6.000	6.000	6.000
Expansion Vessel			Litre	8	8	8	8
Pressure Relief Valve			bar	2,9	2,9	2,9	2,9
Air Purge Valve			Φ, inch	BSPP male 3/8"	BSPP male 3/8"	BSPP male 3/8"	BSPP male 3/8"
Service Valve			Φ, inch	BSPP male 1 1/4"	BSPP male 1 1/4"	BSPP male 1 1/4"	BSPP male 1 1/4"
Sound	Sound Pressure (Heating/Cooling)		dB(A)	31/31	31/31	38/38	38/38
	Sound Power		dB(A)	48	48	55	55
External Dimension	Net Weight		kg	45,5	46,5	46,5	46,5
	Net Dimensions (WxHxD)		mm	510 x 850 x 315	510 x 850 x 315	510 x 850 x 315	510 x 850 x 315

Dimensional Drawings

EHS Hydro Unit

AE090/160MNYD✱H✱✱

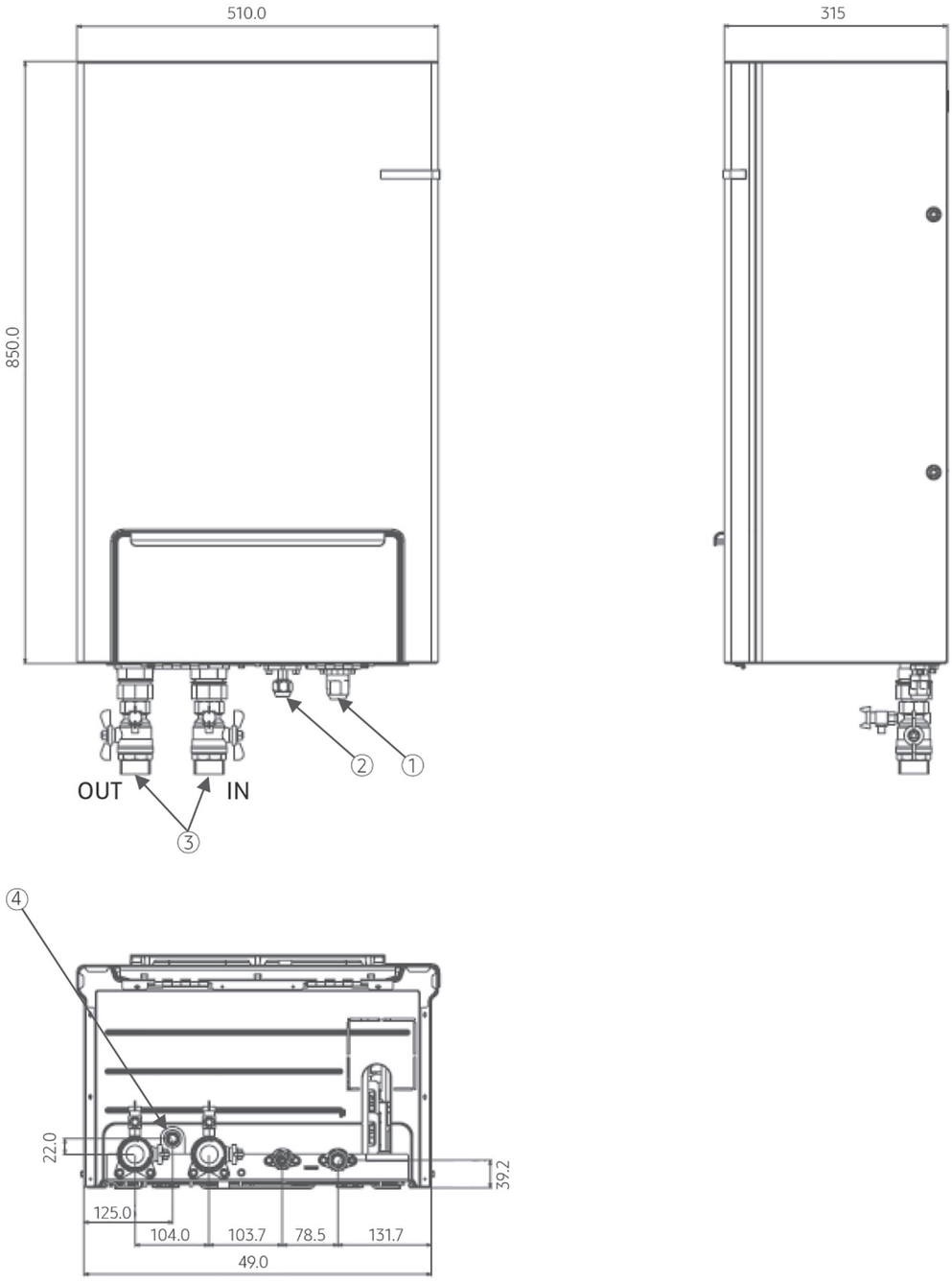

NO	Table of Descriptions
1	Gas Ref. Pipe
2	Liquid Ref. Pipe
3	Water Pipe (Inlet/Outlet)
4	Drain Hose Connector

Controls & Accessories

Line-up

	Product	Model	Image	Matchable Products
Individual Control System	Wireless Remote Controller	AR-EH03M AR-EH03E		DVM, FJM, CAC
	Wireless Remote Controller	AR-KH00E		360 Cassette Only
	Wired Remote Controller	MWR-WE13		DVM, CAC, FJM
	Simple Type	MWR-SH00N		DVM, CAC
	Touch Simple Type	MWR-SH10N		DVM, CAC
	ERV Wired Remote Controller	MWR-VH12N		ERV
	Wireless Receiver Kit	MRK-A10N		DVM, CAC (only Duct models)
Centralised Control System	ON/OFF Controller	MCM-A202DN		DVM, FJM, CAC, ERV Plus, EHS Split/Mono
	Touch Centralised Controller	MCM-A300N		DVM, FJM, CAC, ERV Plus, EHS Split/Mono
	Wi-Fi kit	MIM-H03		FJM Wi-Fi kit
	Module Controller	MCM-A00N		DVM Chiller
Integrated Management System	DMS2.5	MIM-D01AN		DVM, FJM, CAC, ERV Plus, EHS Split/Mono
	S-NET3	MST-P3P		

	Product	Model	Image	Matchable Products
Gateway System	BACnet Gateway	MIM-B17BN		DVM, FJM, CAC, ERV Plus, EHS Split/Mono
	LonWorks Gateway	MIM-B18BN		DVM, FJM, CAC, ERV Plus, EHS Split/Mono
	External Contact Interface Module	MIM-B14		DVM, RAC, FJM, CAC, EHS
	PIM (Pulse Interface Module)	MIM-B16N		DVM, FJM, CAC, ERV Plus, EHS Split/Mono
	Interface Module	MIM-N01		FJM, CAC
	ERV Interface Module	MIM-N10		ERV
	FCU Interface Module	MIM-F10N		Chiller
Installation/ Test Run Solution	S-Converter	MIM-C02N		
Others	External Room Sensor	MRW-TA		DVM, FJM, CAC
	Operation Mode Selection Switch	MCM-C200		
	MTFC (Multi-Tenant Function Controller)	MCM-C210		

Features & Dimensional Drawings

Individual Control System

Wireless Remote Controller
MR-EH00

- Operation ON/OFF control
- Fan speed control
- Operation temperature setting
- Filter replacement alarm reset
- Air swing control
- Simple ON/OFF timer
- Indoor unit option code setting
- Option/Setting selection

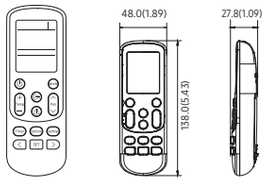

Wireless Remote Controller
AR-KH00E

- 360 cassette airflow direction control
- Operation ON/OFF control
- Fan speed control
- Operation temperature setting
- Filter replacement alarm reset
- Simple ON/OFF timer
- Indoor unit option code setting

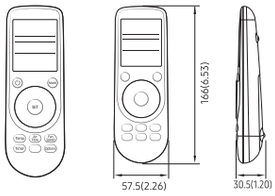

Wired Remote Controller
MWR-WE13N / MWR-WE13 (FJM Only)

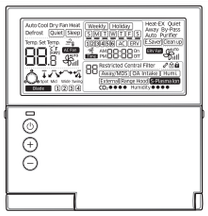

Air conditioner/ERV control
- AC operation ON/OFF control
- AC operation mode, setting temperature, fan speed, airflow direction setting
- AC individual blade control
  (Function is available when indoor units support any of above functions)
- ERV operation ON/OFF control
- ERV operation mode, fan speed setting
- AC/ERV error monitoring
- Filter cleaning alert and reset alert time
- Individual/group control, indoor unit/ERV interlocking control
- Energy saving control
- Control maximum 16 "Indoor unit + ERV" in group with single wired remote controller
- 360 Cassette and Wind-Free compatible

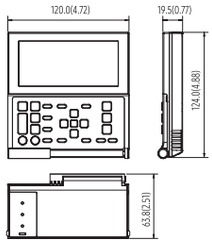

Energy saving operation
- Upper/Lower temperature limit setting
- Automatic operation stop: Automatically stops the operation, when it is not used for certain period of time set by user

Weekly operation schedule setting
- Weekly operating schedule (A/C only, ERV only, A/C+ERV)
- Able to set desired AC operation mode, setting temperature and fan speed to operate based on weekly reservation
- Able to apply schedule exception day

User convenience function
- Child lock
- Different button permission levels (Operation mode, temperature setting, ON/OFF, fan speed)
- Real-time clock: Displays current time, day (Summer time support)
- Built-in room temperature sensor
- Service mode support
  - Indoor unit cycle data monitoring
  - Indoor unit option code setting and monitoring
  - Indoor unit address setting and monitoring

Simple Type
MWR-SH00N

- Simplified wired remote controller
- AC operation ON/OFF control
- Fan speed control
- Setting operation mode and temperature
- Reset filter cleaning alert indicator
- Adjust airflow direction
- Operation ON/OFF timer function

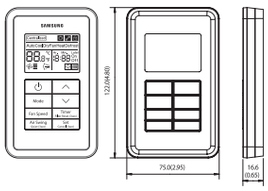

Touch Simple Type
MWR-SH10N

- Touch screen wired remote controller
- IR receiver is included
- Quiet, Sleep, Outing mode
- AC operation ON/OFF control
- Fan speed control
- Setting operation mode and temperature
- Reset filter cleaning alert indicator
- Operation ON/OFF timer function

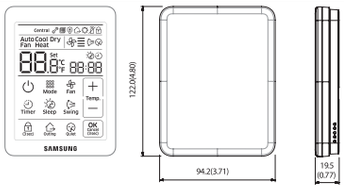

ERV Wired Remote Controller
MWR-VH12N

- Wired remote controller for ERV
- ERV operation ON/OFF control
- Fan speed control
- Operation mode setting
- Filter replacement alarm reset
- Outing mode
- Simple ON/OFF timer

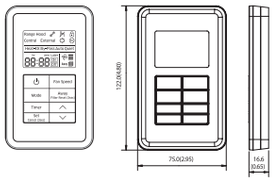

Wireless Receiver Kit
MRK-A10N

- Concealed wireless signal receiver
- Filter replacement sign
- Fan operation display
- Operation Timer setting display
- Operation ON/OFF button
- Operation On display LED (blue)
- Defrost operation display LED (red)

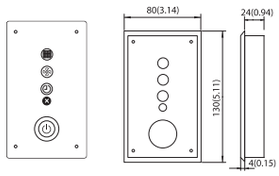

Centralised Control System

ON/OFF Controller
MCM-A202DN

- Maximum 16-group controller (Max. 128 units)
- Whole/Group/Individual indoor unit control (ON/OFF)
- Restriction on the use of wireless/wired remote controllers and external contact control
- Cooling and heating mode control
- Indoor unit error display

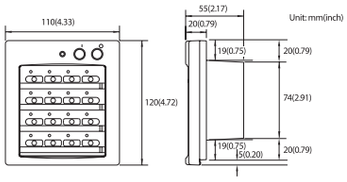

Touch Centralised Controller
MCM-A300N

- 7 inch touch LCD controller
- Controls maximum 128 indoor units
- Controls maximum 12 zones
- Schedule control, Indoor unit usage restriction, View indoor unit error history

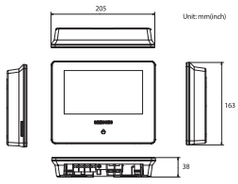

Wi-Fi Kit
MIM-H03N

- Control and monitoring system air conditioner by mobile phone. (Max. 16 units)
- Weekly schedule setting
- Group control and monitoring (ON/OFF)
- Current/daily/weekly/monthly energy usage data of outdoor unit. (This function is available in certain outdoor unit model)

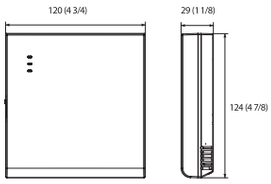

Module Controller
MCM-A00N

- DVM CHILLER ON/OFF control (Module/Group)
- Operation mode, water outlet temperature setting
- Optional operation setting
- Module/Group setting
- Weekly operation schedule setting

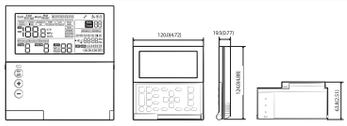

Gateway System

BACnet Gateway
MIM-B17BN

With the BMS control and monitoring function, BACnet gateway makes it easy to control the air conditioning network in various ways. BACnet gateway can control up to 256 indoor units, used in combination with S-NET 3.

- Interface for BACnet management system
- Maximum 256 indoor units plus ERVs support with a maximum of 80 interface modules
- Includes DMS 2.5 functions

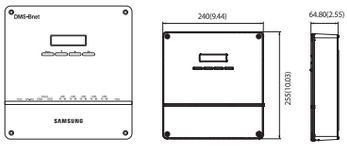

LonWorks Gateway
MIM-B18BN

LonWorks gateway is an interface for Lon-Connection to LonWorks management system, providing you with a more convenient way to manage your air conditioning system. It can control a maximum of 128 indoor units, used in combination with S-NET 3.

- Exclusive use for DMS 2.5 power distribution
- Connection with up to 8 watt-hour meters
- Pulse interface with watt-hour meters
- Watt hour meter - by 3rd party

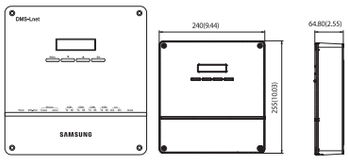

External Contact Interface Module
MIM-B14

Samsung Guestroom Management System saves users the energy and money wasted on cooling an unoccupied room. The air conditioner is activated when the Key-Tag is in place and turns off when the Key-Tag is removed. An external contact interface module provides direct indoor unit control via an external contact signal, as well as window-synchronised indoor unit control. The emergency control function features simple contact input. Plus the module generates indoor unit operation/error state output through relay contacts.

- Direct indoor unit control by external contact signal
- Window-synchronised indoor unit control
- Emergency control with simple contact input
- Indoor unit operation/error state output through relay contacts

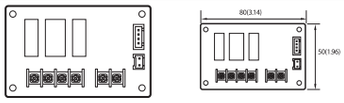

PIM (Pulse Interface Module)
MIM-B16N

- The Watt-hour Meter Interface Module can be exclusively used for DMS 2.5 power distribution, displaying power consumption for each watt-hour meter.
- Exclusive use for DMS 2.5 power distribution
- Connection with up to 8 watt-hour meters
- Pulse interface with watt-hour meters
- Watt hour meter - by 3rd party

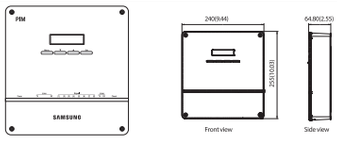

Interface Module
MIM-N01

- Communication interface module between outdoor units and the upper level controller which has different communication type
- Connect 1 interface module to 1 outdoor unit
- Individual control - Maximum 48 indoor units
- Group control - Maximum 16 groups
- Detecting communication type automatically: Judge the communication type of upper level controller according to communication type of the outdoor unit
- Supported communication type
  - Conventional communication outdoor unit ←→ New communication upper level controller
  - New communication outdoor unit ←→ Conventional communication upper level controller

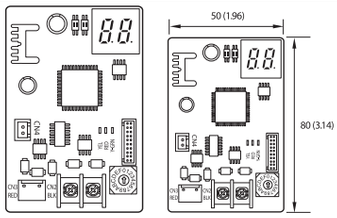

ERV Interface Module
MIM-N10

- Communication interface module between new communication ERV and controller
- Connect 1 ERV interface module to Max. 16 ERVs
- Individual control – Maximum 16 ERVs
- Group control – Maximum 16 groups
- Supported communication type
  - Conventional communication ERV ←→New communication upper level controller
  - New communication ERV ←→ Conventional communication upper level controller
  - New communication ERV ←→ New communication upper level controller

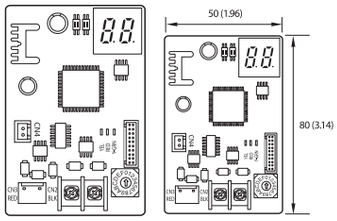

FCU Interface Module
MIM-F10N

- Communication interface module between
- Connect 1 FCU interface module to Max. 16 FCU KITs.
- Supports FCU KIT only

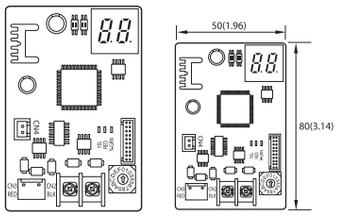

Installation/Test Run Solution

S-Converter
MIM-C02N

- Communication converting module to connect Samsung system air conditioner to a PC.
- Main purpose for use
  - To connect with test run program [Test run program]
  - S-NET Pro: Conventional communication
  - S-NET Pro2: New communication

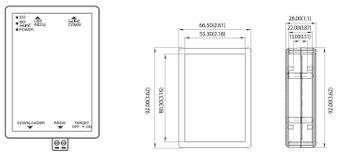

Others

External Room Sensor
MRW-TA

- Indoor unit is operated by MRW-TA instead of its own sensor.
- Wire length : 12m(39ft)

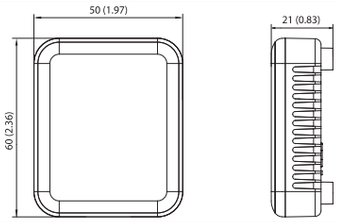

Operation Mode Selection Switch
MCM-C200

- Outdoor unit operation mode selection (Cooling, Heating or Auto)
- Mixed operation mode protection

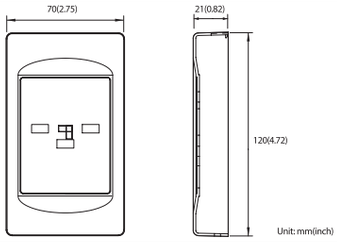

MTFC (Multi-Tenant Function Controller)
MCM-C210

- Multi tenant function controller is an auxiliary power supply device which allows indoor unit to turn off (close EEV) normally and maintain communication when main power supply is cut.
- It is used in site such as hotel where individual power is supplied to the indoor unit

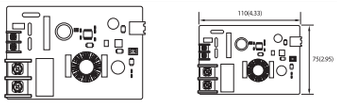

Product Features

S-Net 3

S-Net 3

S-NET 3 manages a group of buildings through Data Management Servers (DMS 2.5) that individually manage each building, providing flexible and complete control for a wide variety of applications. Users can control and monitor up to 4,096 indoor units, including ERV, ERV PLUS and AHU. Wireless and wired remote control restrictions provide greater visibility on operations. The range of control includes temperature limit setting, operation mode lock and multiple/all indoor unit selection. In addition, an icon-based indoor unit display mode enables easier and more intuitive usability.

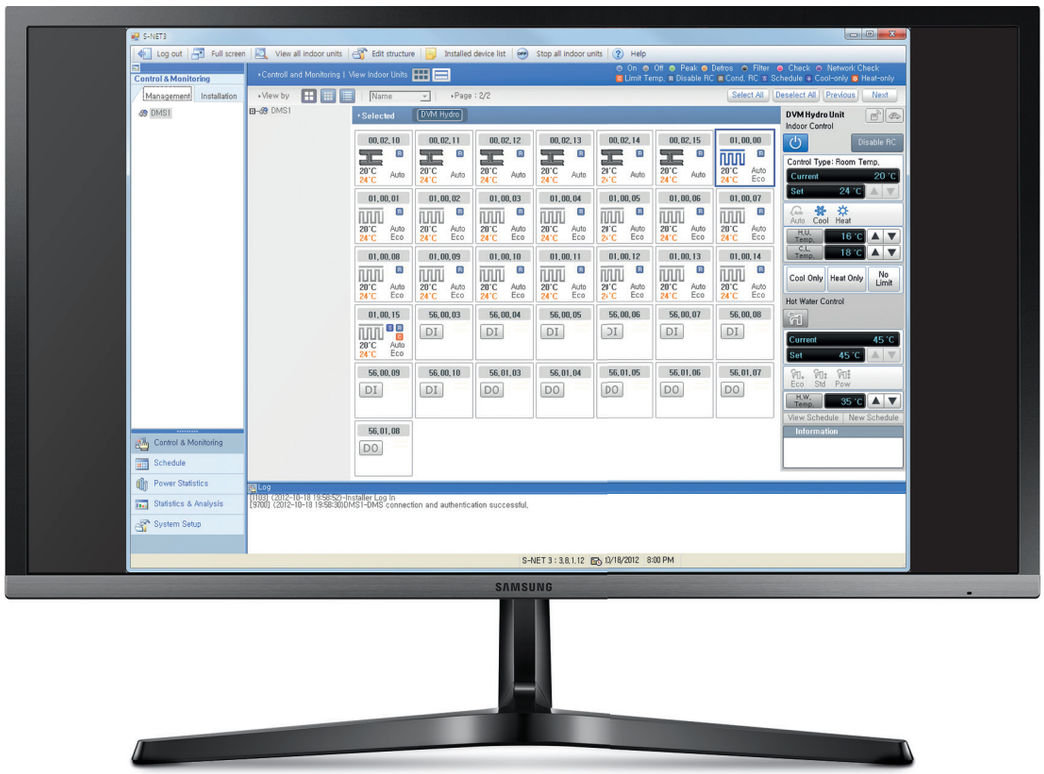

Power Distribution Management

Users can ensure optimal power usage with a data query for power distribution and operation times. Administrators can then generate and print power distribution reports for a complete survey on the operations. For more specific output, S-NET 3 can include time section settings for different electricity rates and a group setting for the power distribution summary.

Schedule Control

S-NET 3 provides easy-to-read graphical schedule settings, enabling administrators to schedule operation weekly or daily or exclude dates with the exception date setting function.

History Management

S-NET 3 offers error and event history management, as well as report generation and printing, so users can readily identify and resolve issues. There is also operation history management for indoor units.

Zone Management

With S-NET 3, users can customise the management structure regardless of the installation structure. They can also create and edit control zones and manage the tree structure for the control zones.

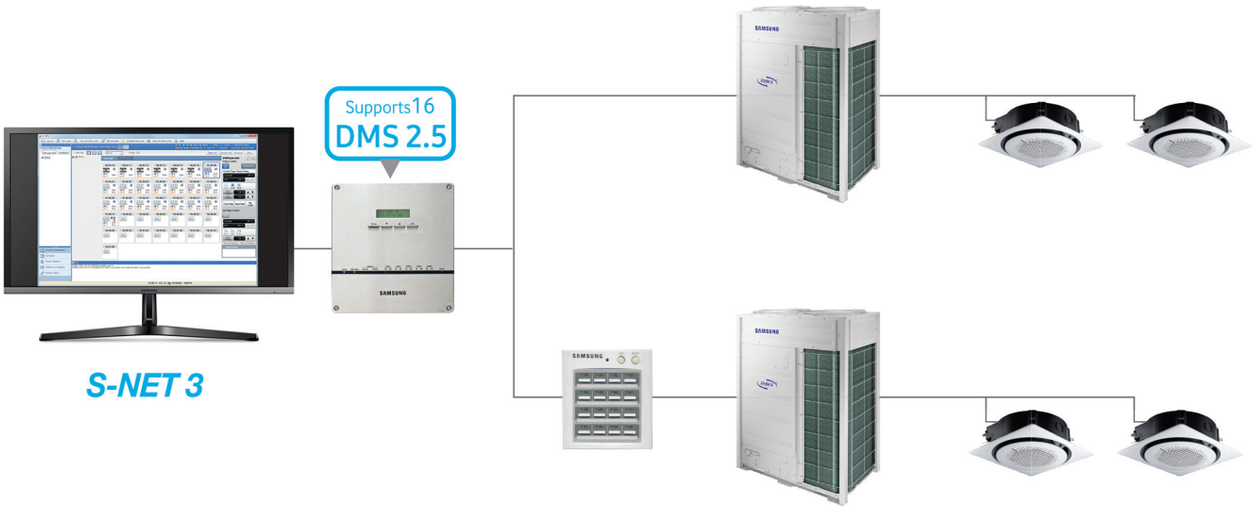

Product Features

DMS 2.5

DMS 2.5

The New Data Management Server (DMS) 2.5 can manage a variety of different air conditioning units, and the newly upgraded functions can automatically manage the air conditioning system for users. This eliminates the need to open each outdoor unit to monitor operation. Detailed refrigerant flow can be checked in the control room. This helps to reduce service lead time and keep the units up and running. Users can control and monitor up to 256 indoor units, including ERV, ERV PLUS, AHU, DVM CHILLER and FCU Kit, via the Internet. The control functions include on/ off operation mode, and fan speed and temperature settings

User Editable Control Logic

User can edit control logic with arithmetic and conditional operators and parameters. Energy can be efficiently used and reduced for various operation conditions.

Rapid & Easy Service Response

DMS 2.5 provides easy remote control and monitoring through the internet. You can receive an email notification at your private email account in the event of malfunction.

Smart Central Management

DMS 2.5, the Control and Monitoring Zone edition, offers smart centralised zone management. The restrictions on wireless and wired remote controller provide better visibility on operations. It can also manage temperature limit setting and operation mode restriction.

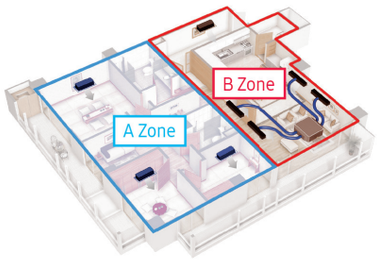

A Zone: Cooling only/No remote controller/ Minimum setting temperature in cooling is 20°C
B Zone: Cooling only/Remote controller use

Watt-hour Meter Interface Module

The watt-hour meter interface module can be exclusively used for DMS 2.5 power distribution, displaying power consumption for each watt-hour meter. It connects up to eight watt-hour meters (not provided by Samsung) and features a pulse interface for each meter.

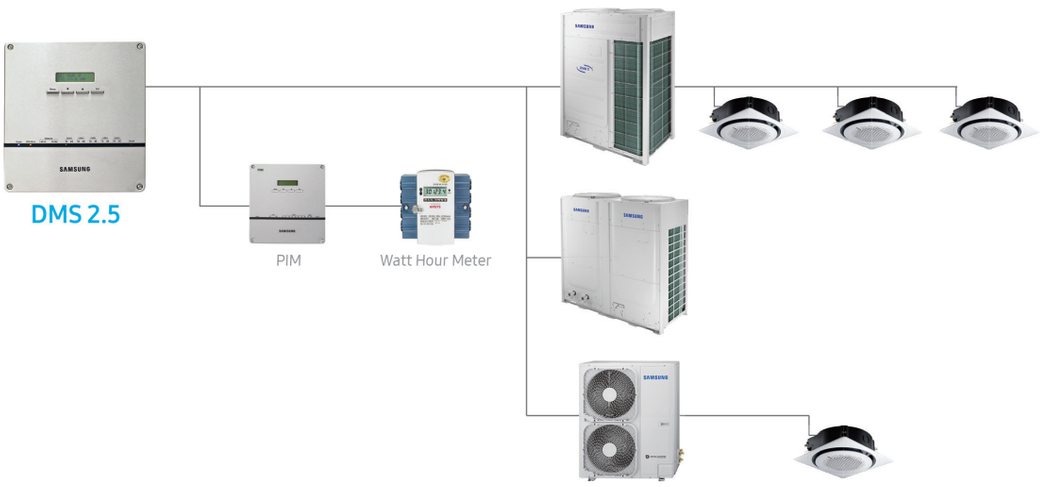

Accessories

Classification	Image	Model		Application
		DVM S (New Communication Protocol)	CAC, FJM	
Drain Pump		MDP-E075SEE3D	MDP-E075SEE3	Slim Duct(2.0 ~ 14.0 kW)
		MDP-M075SGU1D	MDP-M075SGU1	M.S.P Duct(9.0/11.2 kW)
		MDP-M075SGU2D	MDP-M075SGU2	M.S.P Duct(12.8/14.0 kW) H.S.P Duct(11.2/14.0 kW)
		MDP-M075SGU3D	MDP-M075SGU3	M.S.P Duct(5.6/7.1 kW)
		MDP-N047SNC0D		Fresh Air Intake Duct (14.0 kW)
		MDP-N047SNC1D	MDP-N047SNC1	H.S.P Duct(22.4/28.0 kW) Fresh Air Intake Duct (22.4/28.0 kW)
		-	MDP-G075SP	Global Duct (External Type)
		-	MDP-G075SQ	Global Duct (Internal Type)
AHU Kits		MXD-K025AN	-	7.0 ~ 8.75 kW AHU
		MXD-K050AN	-	14.0 ~ 17.5 kW AHU
		MXD-K075AN	-	21.0 ~ 26.25 kW AHU
		MXD-K100AN	-	28.0 ~ 35.0 kW AHU
		MXD-A64K100E	-	AHU EEV Kit (10HP)
		MCM-D201N	-	Control Kit (PBA, 10HP~40HP)
Humidifier		MVO-VA050100	-	500 CMH (ERV Plus)
		MVO-VA100100	-	1,000 CMH (ERV Plus)
360 Cassette Front Panel		PC4NUDMAN	PC4NUDMAN	NASA, Square
		PC4NBDMAN	PC4NBDMAN	NASA, Square - Black
		PC4NUNMAN	PC4NUNMAN	NASA, Circle (Exposed installation)
		PC4NBNMAN	PC4NBNMAN	NASA, Circle (Exposed installation) - Black
Wind-Free™ 4-Way Cassette Front Panel		PC4NUFMAN	PC4NUFMAN	Wind-Free 4-Way Cassette
4-Way Cassette Front Panel		PC4NUSKAN	-	4-Way Cassette S - Waffle
		PC4NUSKEN	-	4-Way Cassette S - Classic
		PC4NBSKAN	PC4NBSKA	4-Way Cassette S - Black
		-	P4SMA	4-Way Cassette
Wind-Free™ 4-Way Cassette Front Panel (600x600)		PC4SUFMAN	PC4SUFMAN	Wind-Free 4-Way Cassette (600x600)
4-Way Cassette (600 x 600) Front Panel		PC4SUSMBN	PC4SUSMC	4-Way Cassette S (600x600) -Waffle
		PC4SUSMFN	PC4SUSMG	4-Way Cassette S (600x600) -Classic
Wind-Free 1-Way Cassette Front Panel		PC1NWFMAN		
1-Way Cassette Front Panel		PC1MWSKAN, PC1NWSMAN, PC1BWSMAN	-	1-Way Cassette (New Air Fluid Design) (1.7~2.2kW)
		PC1NUSMAN	PSSMA	Slim 1-Way Cassette (2.2~3.5kW)
		PC1BWSEAN	-	Slim 1-Way Cassette (5.6~7.1kW)
		PC1NUPMAN	PC1NUPMA	Slim 1-Way Cassette Z-Sliding (2.2~3.5kW)
2 Way Cassette Front Panel		PC2NUSMEN		2Way Cassette
SPi Ionizer		MSD-CAN1	MSD-CAN1	Big Ceiling
		MSD-EAN1	MSD-EAN1	Duct S

Motion Detect Sensor		MCR-SMA	MCR-SMA	4-Way Cassette S (600x600)
		MCR-SMC		Wind-Free™ 4-Way
		MCR-SMD		Wind-Free™ Mini 4-Way

Classification	Image	Model	Application
Y- joint		MXJ-YA1509M	15.0 kW and below
		MXJ-YA2512M	Over 15.0 kW ~ 40.0 kW and below
		MXJ-YA2812M	Over 40.0 kW ~ 45.0 kW and below
		MXJ-YA2815M	Over 45.0 kW ~ 70.3 kW and below
		MXJ-YA3419M	Over 70.3 kW ~ 98.4 kW and below
		MXJ-YA4119M	Over 98.4 kW ~ 135.2 kW and below
		MXJ-YA4422M	Over 135.2 kW
Y-Joint (HR Only)		MXJ-YA1500M	22.4 kW and below
		MXJ-YA2500M	Over 22.4 kW ~ 70.3 kW and below
		MXJ-YA3100M	Over 70.3 kW ~ 135.2 kW and below
		MXJ-YA3800M	Over 135.2 kW
Y-Joint (Outdoor Unit)		MXJ-TA3419M	135.2 kW and below
		MXJ-TA4122M	140.2 kW and Over
Y-Joint (HR Outdoor Unit)		MXJ-TA3100M	135.2 kW and below
		MXJ-TA3800M	140.2 kW and Over
Distribution Header		MXJ-HA2512M	45.0 kW and below (for 4 rooms)
		MXJ-HA3115M	70.3 kW and below (for 8 rooms)
		MXJ-HA3819M	Over 70.3 kW ~ 135.2 kW and below (for 8 rooms)
Heat Recovery Changer		MCU-R4NEK1N	
		MCU-S6NEK3N	
MCU		MCU-S6NEK2N	6 ports, max 61.6kW (~16kW/1port)
		MCU-S4NEK3N	4 ports, max 61.6kW (~16kW/1port)
		MCU-S2NEK2N	2 ports, max 32.0kW (~16kW/1port)
		MCU-S1NEK1N	1 port, max 16.0kW (~16kW/1port)
EEV Kit		MXD-E24K132A	2 Indoor
		MXD-E24K200A	
		MXD-E32K200A	
		MXD-E24K232A	3 Indoor
		MXD-E24K300A	
		MXD-E32K224A	
		MXD-E32K300A	
		MEV-E24SA	1 Indoor
		MEV-E32SA	
DPM Kit		MXD-A38K2A	8~12 HP
		MXD-A12K2A	14~16 HP
		MXD-A58K2A	18~26 HP

Notes

Notes

Notes

Notes

Notes