Follow

Commercial

Commercial Air Conditioner (CAC)

Line-up Indoor

	Capacity (kW)	2.6	3.5	5.2	6.0	7.1	9.0	10.0	12.0	14.0	16.0	18.0	20.0	25.0
360 Cassette	Single-phase					●	●	●	●	●				
	Three-phase							●	●	●				
Wind-Free™ 4-Way Cassette	Single-phase			●		●	●	●	●	●				
4-Way Cassette	Single-phase			●		●	●	●	●	●				
	Three-phase							●	●	●				
Wind-Free™ 4-Mini Way Cassette	Single-phase	●	●	●	●	●								
4-Way Mini Cassette	Single-phase	●	●	●	●	●								
1-Way SLIM Cassette	Single-phase	●	●											
Wall-Mounted AR5000	Single-phase	●	●	●		●								
Wall-Mounted A5580	Single-phase	●	●			●								
LSP Slim Duct	Single-phase	●	●	●		●								
MSP Duct	Single-phase		●	●	●	●	●	●	●	●				
	Three-phase						●	●	●	●				
HSP Duct	Three-phase											●	●	●
Console	Single-phase	●	●	●										
Floor-Standing/ Ceiling – Ceiling	Single-phase			●		●		●	●	●	●			
	Three-phase							●	●	●				
Floor-Standing	Single-phase							●						
	Three-phase									●				

Line-up Outdoor

CAC Single Split systems Range

Type	2.6kW	3.5kW	5.2kW	6kW	7.1kW	9kW	10kW	12kW	14kW	16kW	18kW	20kW	25kW
360 Cassette					●	●	●	●	●				
Wind-Free™ 4-Way Cassette			●		●	●	●	●	●				
4-Way Cassette			●		●	●	●	●	●				
Wind-Free™ Mini 4-Way Cassette	●	●	●	●	●								
4-Way Mini Cassette	●	●	●	●	●								
1-Way Cassette	●	●											
Wall-Mounted AR5000	●	●	●		●								
Wall-Mounted A5580	●	●			●								
LSP Slim Duct	●	●	●		●								
MSP Duct		●	●	●	●	●	●	●	●				
HSP Duct											●	●	●
Console	●	●	●										
Floor-Standing/Ceiling – Ceiling			●		●		●	●	●	●			
Floor-Standing							●		●				

DPM Multi-split systems range - Twin, Triple & Quad

7kW TWIN	10kW TWIN	10kW TRIPLE	12kW TWIN	12kW TRIPLE	12kW QUAD	14kW TWIN	14kW TRIPLE	14kW QUAD	20kW TWIN	20kW TRIPLE	20kW QUAD	25kW TWIN	25kW TRIPLE	25kW QUAD
						2 x 7.1			2 x10.0 2 x 9.0	3 x 7.1		2 x12.0	3 x 9.0	4 x 7.1
	2 x 5.0			3 x 5.0		2 x 7.1	3 x 5.0		2 x10.0 2 x 9.0	3 x 7.1	4 x 5.0	2 x12.0	3 x 9.0	4 x 7.1
	2 x 5.0			3 x 5.0		2 x 7.1	3 x 5.0		2 x10.0 2 x 9.0	3 x 7.1	4 x 5.0	2 x12.0	3 x 9.0	4 x 7.1
2 x 3.5	2 x 5.0	3 x 3.5	2 x 6.0	3 x 5.0	4 x 3.5	2 x 7.1	3 x 5.0	4 x 3.5		3 x 7.1 3 x 6.0	4 x 5.0			4 x 7.1 4 x 6.0
2 x 3.5	2 x 5.0	3 x 3.5	2 x 6.0	3 x 5.0	4 x 3.5	2 x 7.1	3 x 5.0	4 x 3.5		3 x 7.1 3 x 6.0	4 x 5.0			4 x 7.1 4 x 6.0
2 x 3.5		3 x 3.5			4 x 3.5			4 x 3.5						
2 x 3.5	2 x 5.0	3 x 3.5		3 x 5.0	4 x 3.5	2 x 7.1	3 x 5.0	4 x 3.5		3 x 7.1	4 x 5.0			4 x 7.1
2 x 3.5	2 x 5.0	3 x 3.5		3 x 5.0	4 x 3.5	2 x 7.1	3 x 5.0	4 x 3.5		3 x 7.1	4 x 5.0			4 x 7.1
2 x 3.5	2 x 5.0	3 x 3.5		3 x 5.0	4 x 3.5	2 x 7.1	3 x 5.0	4 x 3.5		3 x 7.1	4 x 5.0			4 x 7.1
2 x 3.5	2 x 5.0	3 x 3.5	2 x 6.0	3 x 5.0	4 x 3.5	2 x 7.1	3 x 5.0	4 x 3.5	2 x10.0 2 x 9.0	3 x 7.1 3 x 6.0	4 x 5.0	2 x12.0	3 x 9.0	4 x 7.1 4 x 6.0
2 x 3.5	2 x 5.0	3 x 3.5		3 x 5.0	4 x 3.5		3 x 5.0	4 x 3.5			4 x 5.0			
	2 x 5.0			3 x 5.0		2 x 7.1	3 x 5.0		2 x10.0	3 x 7.1	4 x 5.0	2 x12.0		4 x 7.1

Twin/Triple/Quad combinations

Indoor Unit		Outdoor Unit				Outdoor Unit	
		AC071MXADKH/EU	AC100MXADKH/EU AC100MXADNH/EU	AC120MXADKH/EU AC120MXADNH/EU	AC140MXADKH/EU AC140MXADNH/EU	AC200KXAPNH/EU	AC250KXAPNH/EU
	kW	7	10	12	14	20	25
360 Cassette	7				2	3	4
	9					2	3
	10					2	
	12						2
4-Way cassette	5		2	3	3	4	
	7				2	3	4
	9					2	3
	10					2	
	12						2
Wind-Free™ 4-Way Cassette	5		2	3	3	4	
	7				2	3	4
	9					2	3
	10					2	
	12						2
4-Way mini cassette	3.5	2	3	4	4		
	5		2	3	3	4	
	6			2		3	4
	7				2	3	4
Wind-Free™ 4-Way Mini Cassette 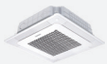	3.5	2	3	4	4		
	5		2	3	3	4	
	6			2		3	4
	7				2	3	4
1-Way cassette	3.5	2	3	4	4		
Wall-Mounted AR5000	3.5	2	3	4	4		
	5		2	3	3	4	
	7				2	3	4
Wall mounted AR 5580	3.5	2	3	4	4		
	5		2	3	3	4	
	7				2	3	4
Slim Duct	3.5	2	3	4	4		
	5		2	3	3	4	
	7				2	3	4
MSP Duct	3.5	2	3	4	4		
	5		2	3	3	4	
	6			2		3	4
	7				2	3	4
	9					2	3
	10					2	
	12						2
Console	3.5	2	3	4	4		
	5		2	3	3	4	
Floor-Standing/ Ceiling – Ceiling	5		2	3	3	4	
	7				2	3	4
	10					2	
	12						2

Product Features

360 Cassette

360 Cassette

The bladeless circular-shaped 360 Cassette is Samsung's stylish and innovative design for air conditioning indoor units. The ground breaking bladeless circular design allows for even cooling with no loss in airflow, setting a new standard for multi-directional cassette units.

Evenly circulates & cools every corner

Unlike traditional 4-Way cassette units that create areas of uneven airflow where cool air cannot reach*, a circular outlet blows cool air in all directions, so every corner of a room is the same temperature**. A bladeless design softly disperses cool air across the room, making you comfortably cool without feeling a cold draft***. With no blades to block the airflow, it also expels 25% more air* and spreads it farther.

* Samsung testing compared to a general 4-Way cassette type air conditioner.
** Within a 9.3m radius the temperature difference is less than 0.6°C.
***Within a 5m radius, no cold draft between 0~1.5m in height (with a 14.0kW indoor unit).

Airflow Control

The air supply is adjusted without using flaps: three booster fans create an under pressure within the circular hollow space in the cassette that deviates the direction of the outgoing air. In this way the “coanda” effect is used for a “rain-like” distribution of the air that makes the room particularly comfortable.

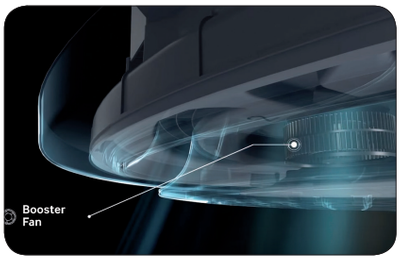

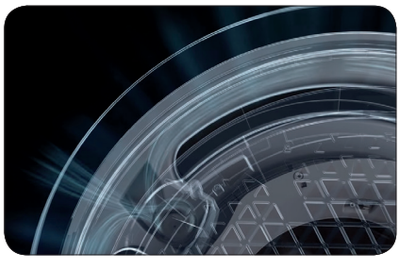

Circular LED Display

The unit features a stylish panel and intuitive LED display that allows users to change the airflow direction depending on preference. Users can choose from three settings including horizontal, vertical, and control individual zones airflow direction.

Circular to Fit Perfectly Everywhere

Users have a choice of either black or white, square or round panel, to fit the air conditioner within the ceiling or exposed, and with any finishing such as wood, concrete, wallpaper and paint, offering ultimate flexibility to suit the style of any room.

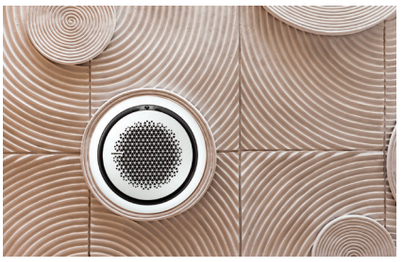

Specifications

360 Cassette

- 360° air supply without distribution flaps ("coanda" effect); pressure losses reduced to a minimum
- Fan with inverter engine; predisposition of the air-inlet to let external air in
- Built-in condensation drain pump (750 mmH2O); antibacterial filter included
- Communication with the "Nasa" protocol
- Virus Doctor device (optional); WI-FI kit (optional)
- Power supply: single-phase 220 V - 50 Hz or three-phase 400 V - 50 Hz
- Inverter Twin Rotary compressor - outdoor unit
- Possibility to connect two, three or four indoor units (twin-triple-quadri)

Model	Indoor Unit Outdoor Unit		AC071MN4PKH/EU AC071MXADKH/ EU	AC090MN4PKH/EU AC090MXADKH/EU	AC100MN4PKH/EU AC100MXADKH/EU
EAN	Indoor Unit		**8806088576589**	**8806088576626**	**8806088576657**
	Outdoor Unit		**8806088576619**	**8806088576855**	**8806088576671**
Cooling	Std Capacity (Min~Max)	kW	7.10 (2.20~8.00)	9.00 (3.00~11.30)	10.00 (3.00~12.00)
	Std Absorption (Min~Max)	kW	2.49 (0.35~3.95)	2.82 (0.60~4.46)	3.40 (0.60~4.70)
	SEER: Seasonal Energy Efficiency Ratio	-	6,2	6,8	6,8
	Seasonal Energy Efficiency Class	-	A++	A++	A++
	Design Heat Load (Pdesignc)	kW	7,1	9,0	10,0
	Indicative Annual Energy Consumption (Q^{CE})	kWh/a	401	463	515
Heating	Std Capacity (Min~Max)	kW	8.00 (1.90~9.00)	10.00 (2.20~13.90)	11.20 (2.20~15.50)
	Std Absorption (Min~Max)	kW	2.40 (0.35~3.95)	2.65 (0.46~5.20)	3.15 (0.46~5.40)
	SCOP: Seasonal Coefficient of Performance	-	4,1	4,3	4,3
	Seasonal Energy Efficiency Class	-	A+	A+	A+
	Design Heat Load (Pdesignh)	kW	4,5	5,3	5,3
	Electric back-up heater capacity elbu (Tj)	kW	-	-	-
	Declared capacity	kW	4,5	5,3	5,3
	Indicative annual energy consumption (Q^{HE})	kWh/a	1537	1726	1726
Indoor Unit	Dimensions (WxHxD)	mm	947x281x947	947x365x947	947x365x947
	Panel Dimensions (WxHxD)	mm	Square: 1000x66x1000 Circle: 1050 x 94 x 105	Square: 1000x66x1000 Circle: 1050 x 94 x 105	Square: 1000x66x1000 Circle: 1050 x 94 x 105
	Weight	Kg	20,2	23,5	23,5
	Panel Weight	Kg	Square: 3,6 Circle: 2.7	Square: 3,6 Circle: 2.7	Square: 3,6 Circle: 2.7
	Treated Air (Max)	m^3/min	17,5	30,1	31,2
	Static Pressure Min-Std-Max	mmH2O	-	-	-
	Sound Power Level	dB(A)	53	60	61
Outdoor Unit	Dimensions (WxHxD)	mm	880x798x310	940x998x330	940x998x330
	Weight	Kg	53	72	72
	Sound Power Level	dB(A)	65	68	69
	Power Supply	Ø, V, Hz	1, 220-240, 50	1, 220-240, 50	1, 220-240, 50
	Operating Range (Cooling)	°C	-15~50	-15~50	-15~50
	Operating Range (Heating)	°C	-20~24	-20~24	-20~24
Installation Data	Liquid/Gas Piping	Ømm (inch)	6.35 (1/4") 15.88 (5/8")	9.52 (3/8") 15.88 (5/8")	9.52 (3/8") 15.88 (5/8")
	Piping length Max	m	50	50	50
	Maximum Elevation Gap (Indoor/Outdoor Unit)	m	30	30	30
	Maximum Piping Lenght without Adding Refrigerant	m	5	30	30
	Additional Refrigerant Charging	g/m	20	50	50
Refrigerant	Refrigerant Type	-	R-410A	R-410A	R-410A
	GWP: Global warming potential of the used refrigerant	-	2088	2088	2088
	Factory Charging	Kg	1,5	3,0	3,0
	Ton equivalent Co_2	tCo_2Eq	3,13	6,26	6,26

Accessories									
Individual Controllers (Optional)				Others (Optional)		Panel (Mandatory)		Panel (Optional)	
AR-KH00E	MWR-SH00N	MWR-SH10N	MWR-WE13N	MIM-H03N	MRW-TA	PC4NUDMAN	PC4NUNMAN	PC4NBDMAN	PC4NBNMAN

AC100MN4PKH/EU AC100MXADNH/EU	AC120MN4PKH/EU AC120MXADKH/EU	AC120MN4PKH/EU AC120MXADNH/EU	AC140MN4PKH/EU AC140MXADKH/EU	AC140MN4PKH/EU AC140MXADNH/EU
8806088576657	**8806088576909**	**8806088576909**	**8806088576947**	**8806088576947**
8806088576886	**8806088576695**	**8806088576923**	**8806088576718**	**8806088576961**
10.00 (3.00~12.00)	12.00 (3.50~13.50)	12.00 (3.50~13.50)	13.40 (3.50~15.50)	13.40 (3.50~15.50)
3.40 (0.60~4.70)	4.70 (0.90~5.30)	4.70 (0.90~7.90)	4.45 (0.80~6.44)	4.45 (0.80~7.90)
6,8	5,7	5,7	3.0 (EER)	3.0 (EER)
A++	A+	A+	-	-
10,0	12,0	12,0	-	-
515	737	737	-	-
11.20 (2.20~15.50)	13.00 (3.50~15.50)	13.00 (3.50~15.50)	15.50 (3.50~18.00)	15.50 (3.50~18.00)
3.15 (0.46~5.40)	4.00 (0.75~5.50)	4.00 (0.75~7.90)	4.54 (0.70~7.36)	4.54 (0.70~7.90)
4,3	4,1	4,1	3.4 (COP)	3.4 (COP)
A+	A+	A+	-	-
5,3	7,4	7,4	-	-
-	-	-	-	-
5,3	7,4	7,4	-	-
1726	2527	2527	-	-
947x365x947	947x365x947	947x365x947	947x365x947	947x365x947
1000x66x1000	1000x66x1000	1000x66x1000	1000x66x1000	1000x66x1000
23,5	23,5	23,5	25,5	25,5
3,6	3,6	3,6	3,6	3,6
31,2	32,5	32,5	32,4	32,4
-	-	-	-	-
61	61	61	61	61
940x998x330	940x998x330	940x998x330	940x1210x330	940x1210x330
72	77	77	87	87
69	70	70	69	69
3, 380-415, 50	1, 220-240, 50	3, 380-415, 50	1, 220-240, 50	3, 380-415, 50
-15~50	-15~50	-15~50	-15~50	-15~50
-20~24	-20~24	-20~24	-20~24	-20~24
9.52 (3/8") 15.88 (5/8")	9.52 (3/8") 15.88 (5/8")	9.52 (3/8") 15.88 (5/8")	9.52 (3/8") 15.88 (5/8")	9.52 (3/8") 15.88 (5/8")
50	50	50	75	75
30	30	30	30	30
30	30	30	30	30
50	50	50	50	50
R-410A	R-410A	R-410A	R-410A	R-410A
2088	2088	2088	2088	2088
3,0	3,0	3,0	3,4	3,4
6,26	6,26	6,26	7,10	7,10

Dimensional Drawings

360 Cassette (square)

AC071MN4PKH/EU

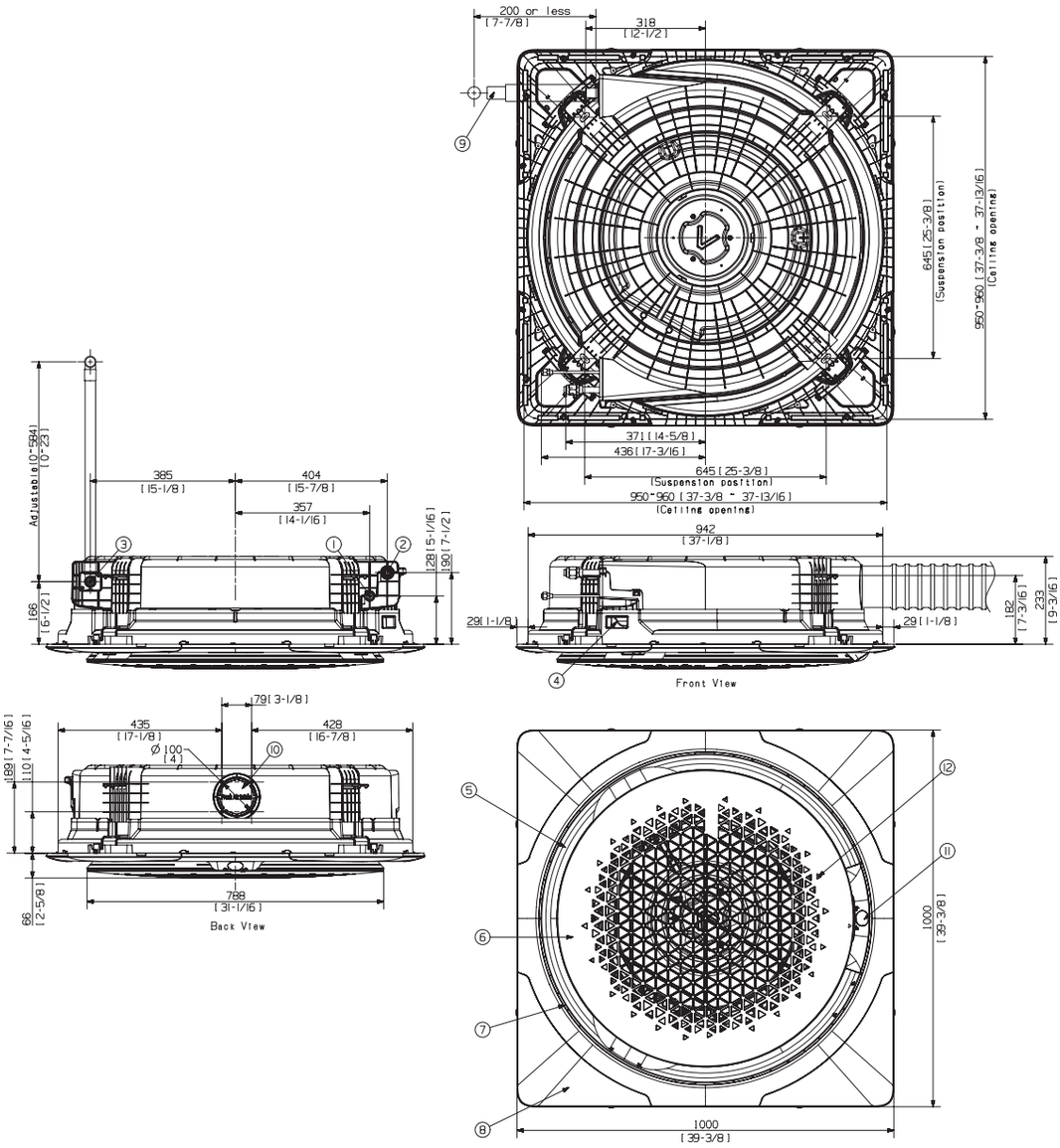

Pos.	Name	Description
1	Liquid piping	ø 6,35 mm (1/4”)
2	Gas piping	ø 15,88 mm (5/8”)
3	Condensation drain piping	VP-25 (OD32, ID25)
4	Power supply cables connection / communication	-
5	Air supply	-
6	Air intake	

Pos.	Name	Description
7	Booster Fan hollow space	
8	Panel	
9	Condensation drain piping (accessory)	
10	Pre-cut hole - external air	ø 100 mm
11	Display	
12	Wireless remote controller receiver	-

360 Cassette (square)

AC090/100/120/140MN4PKH/EU

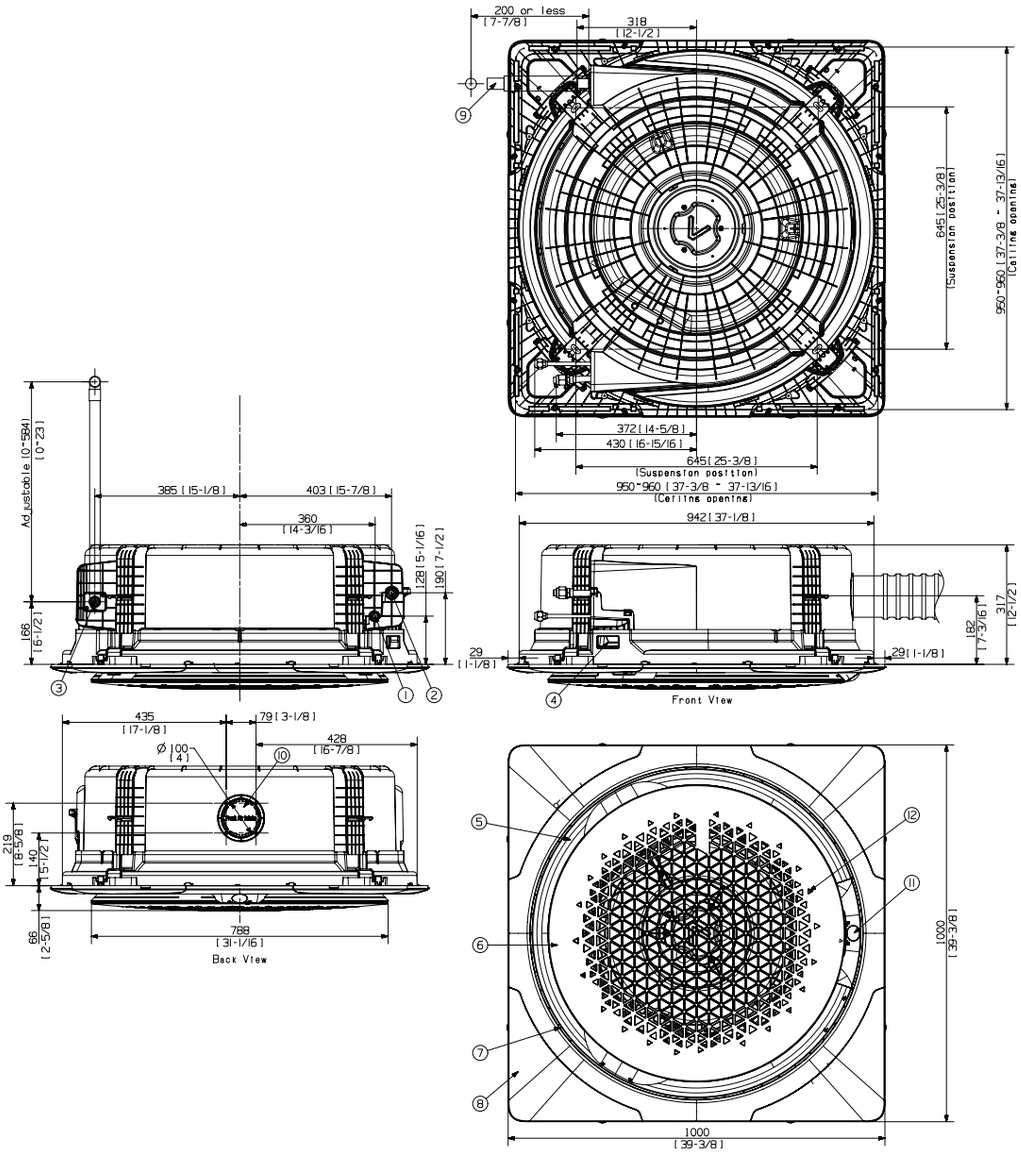

Pos.	Name	Description
1	Liquid piping	ø 9.52 mm (3/8")
2	Gas piping	ø 15,88 mm (5/8")
3	Condensation drain piping	VP-25 (OD32, ID25)
4	Power supply cables connection / communication	-
5	Air supply	-
6	Air intake	

Pos.	Name	Description
7	Booster Fan hollow space	
8	Panel	
9	Condensation drain piping (accessory)	
10	Pre-cut hole - external air	ø 100 mm
11	Display	
12	Wireless remote controller receiver	-

360 Cassette (circle)

AC071MN4PKH/EU

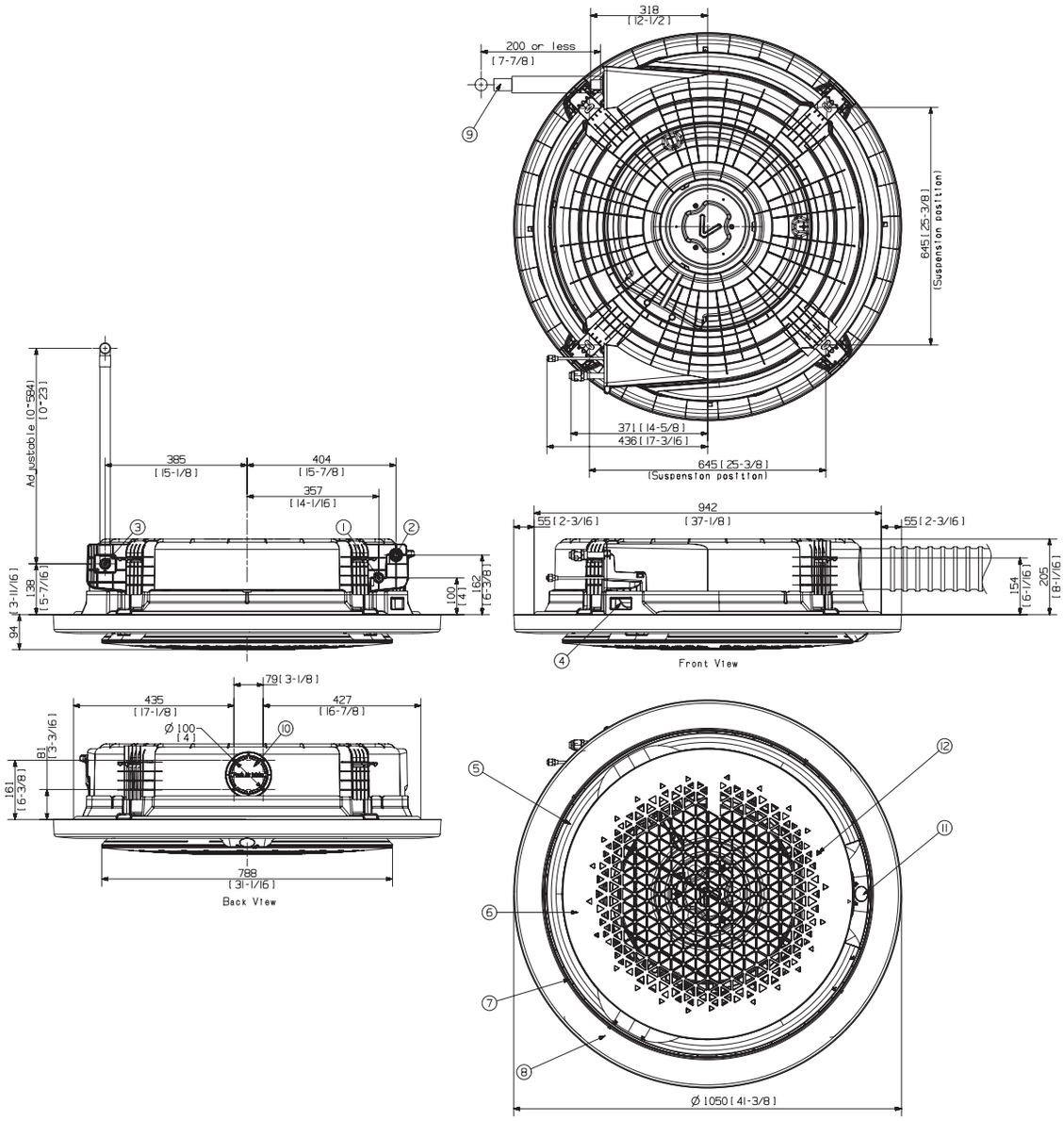

Pos.	Name	Description
1	Liquid piping	ø 6,35 mm (1/4")
2	Gas piping	ø 15,88 mm (5/8")
3	Condensation drain piping	VP-25 (OD332, ID25)
4	Power supply cables connection / communication	-
5	Air supply	-
6	Air intake	

Pos.	Name	Description
7	Booster Fan hollow space	
8	Panel	
9	Condensation drain piping (accessory)	
10	Pre-cut hole - external air	ø 100 mm
11	Display	
12	Wireless remote controller receiver	-

360 Cassette (circle)

AC090/100/120/140MN4PKH/EU

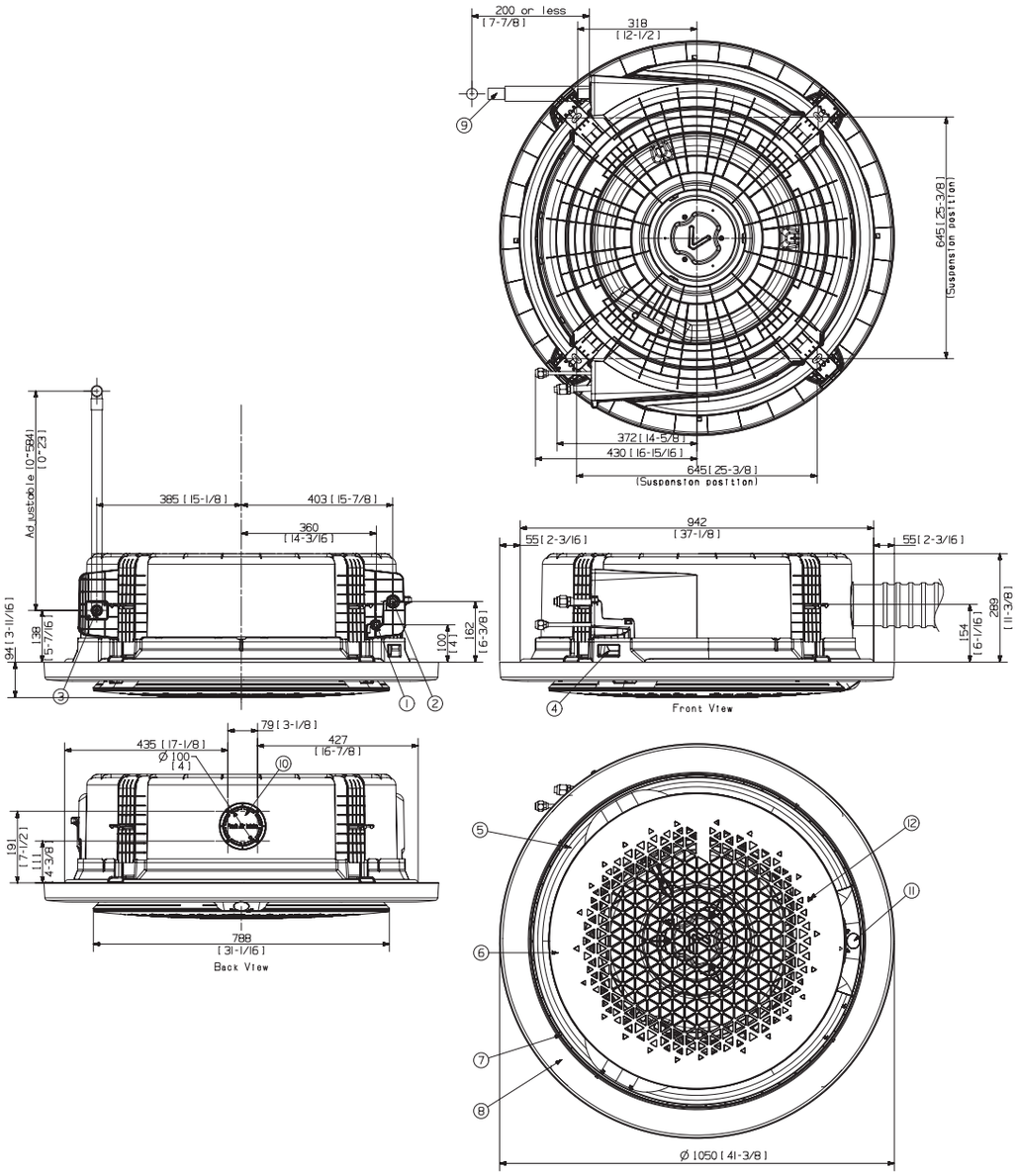

Pos.	Name	Description
1	Liquid piping	ø 9.52 mm (3/8”)
2	Gas piping	ø 15,88 mm (5/8”)
3	Condensation drain piping	VP-25 (OD32, ID25)
4	Power supply cables connection / communication	-
5	Air supply	-
6	Air intake	

Pos.	Name	Description
7	Booster Fan hollow space	
8	Panel	
9	Condensation drain piping (accessory)	
10	Pre-cut hole - external air	ø 100 mm
11	Display	
12	Wireless remote controller receiver	-

Life Fitness
Life Fitness
Life Fitness
Life Fitness

SAMSUNG

Universal CAC Outdoor Unit

AC071MXADKH

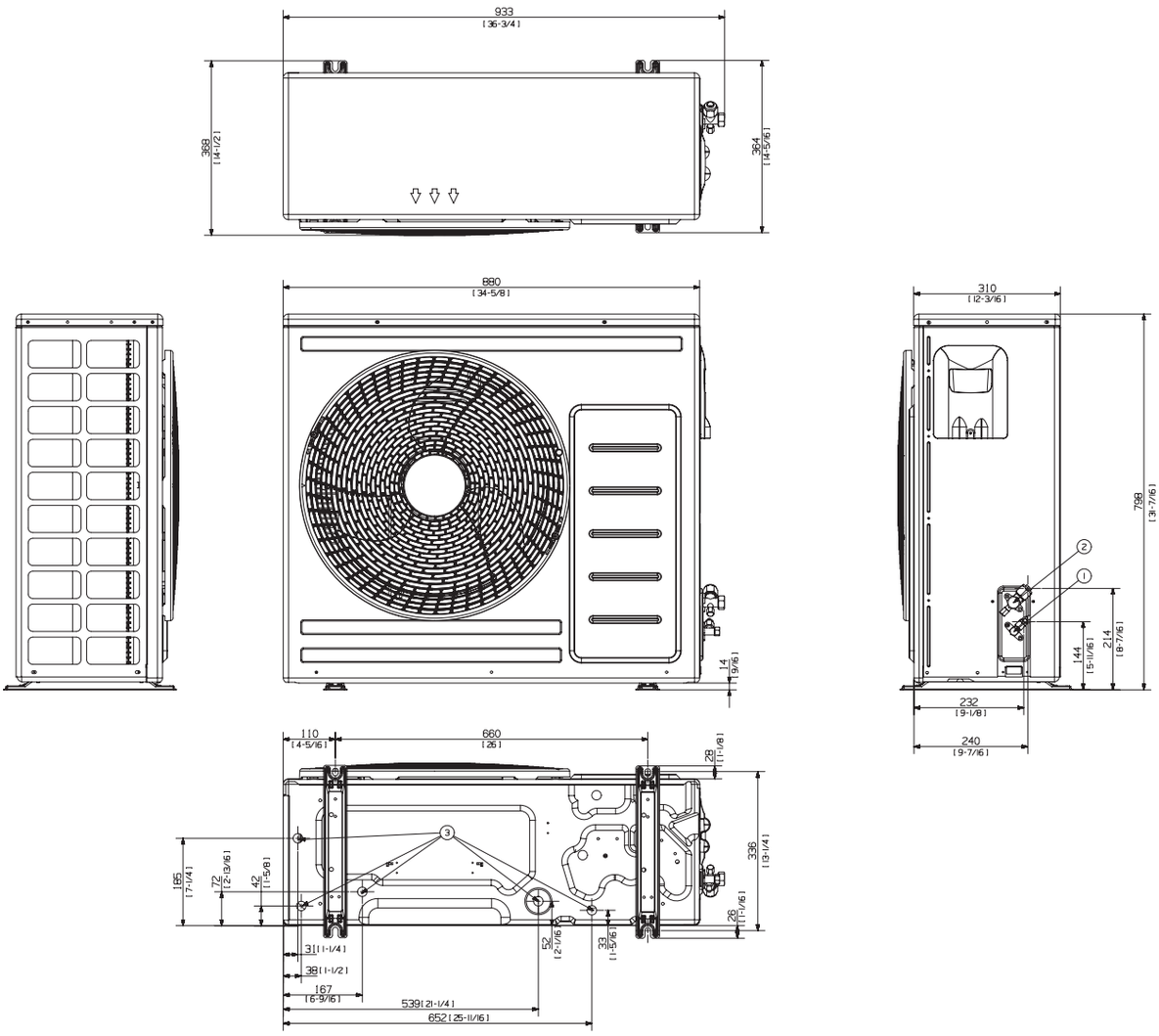

Pos.	Name	Description
1	Liquid piping refrigerant	ø 6,35mm (1/4”)
2	Gas piping refrigerant	ø 15,88mm (5/8”)
3	Hole for condensation drainage	-

Universal CAC Outdoor Unit

AC090/100/120MXAD*H

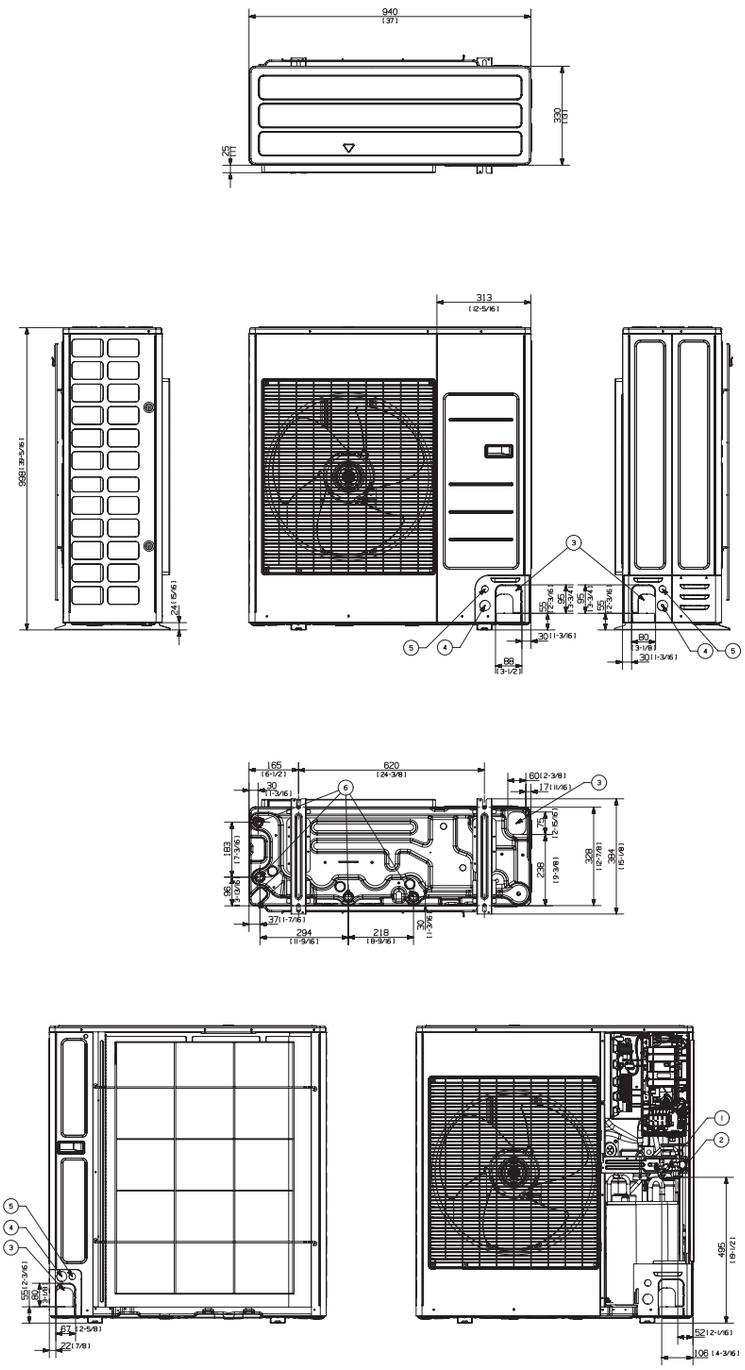

Pos.	Name	Description
1	Liquid piping refrigerant	ø 9,52mm (3/8”)
2	Gas piping refrigerant	ø 15,88mm (5/8”)
3	Direct suction hose	Front / Side / Back / Bottom
4	Power supply cables	Front / Side / Back, ø 34mm (1-3/8”)
5	Communication cables	Front / Side / Back, ø 22mm (7/8”)
6	Hole for condensation drainage	Connect with the supplied draining cap

Universal CAC Outdoor Unit

AC140MXAD*H

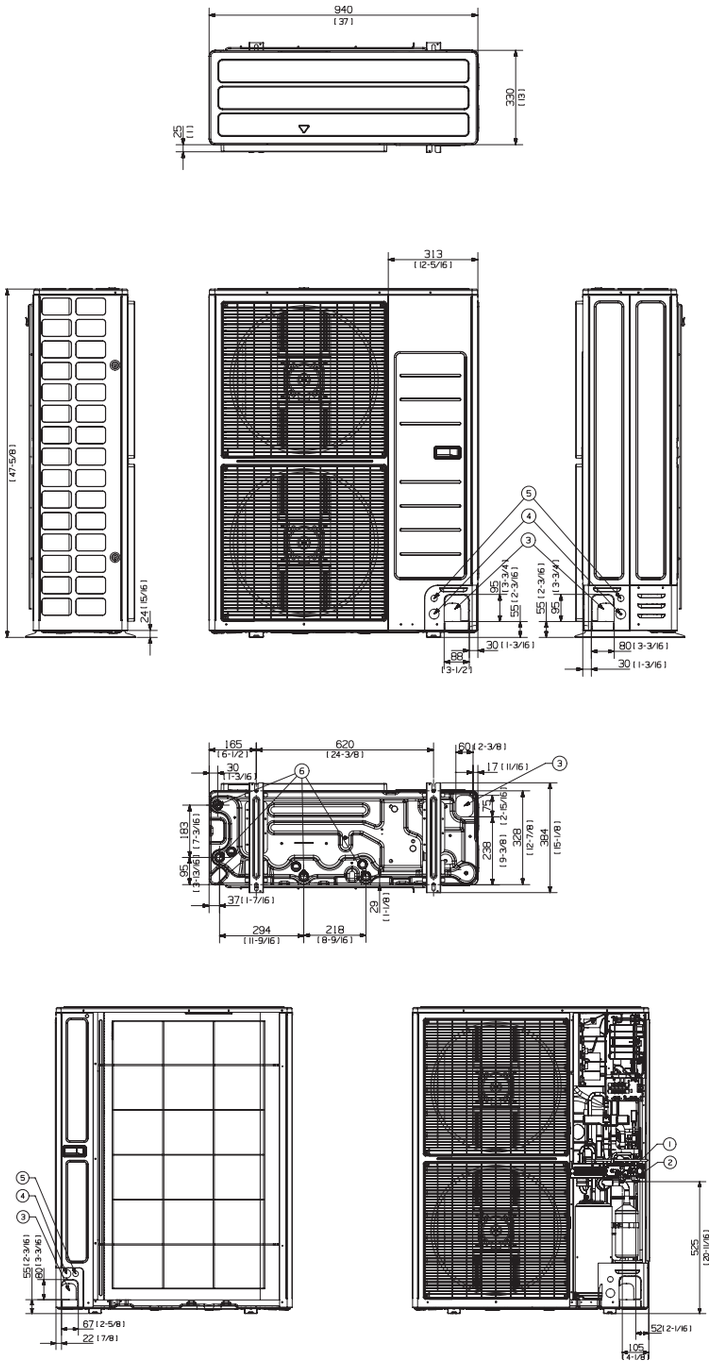

Pos.	Name	Description
1	Liquid piping refrigerant	ø 9,52mm (3/8")
2	Gas piping refrigerant	ø 15,88mm (5/8")
3	Direct suction hose	Front / Side / Back / Bottom
4	Power supply cables	Front / Side / Back, ø 34mm (1-3/8")
5	Communication cables	Front / Side / Back, ø 22mm (7/8")
6	Hole for condensation drainage	Connect with the supplied draining cap